ABB general purpose drives

Quick installation and start-up guide
ACS580-01 drives
Frames R1 to R9

R1-R4

R5

R6-R9

Power and productivity
for a better world™

List of related manuals in English

Drive manuals and guides	Code (English)
ACS580 standard control program firmware manual	*3AXD50000016097*
ACS580-01 (0.75 to 250 kW, 1.0 to 350 hp) hardware manual	*3AXD50000018826*
ACS-AP-X assistant control panels user's manual	3AUA0000085685

Option manuals and guides	
CDPI-01 communication adapter module user's manual	*3AXD50000009929*
DPMP-01 mounting platform for control panels	*3AUA0000100140*
DPMP-02/03 mounting platform for control panels	*3AUA0000136205*
FCAN-01 CANopen adapter module user's manual	*3AFE68615500*
FCNA-01 ControlNet adapter module user's manual	*3AUA0000141650*
FDNA-01 DeviceNet™ adapter module user's manual	*3AFE68573360*
FECA-01 EtherCAT adapter module user's manual	*3AUA0000068940*
FENA-01/-11/-21 Ethernet adapter module user's manual	*3AUA0000093568*
FEPL-02 Ethernet POWERLINK adapter module user's manual	*3AUA0000123527*
FPBA-01 PROFIBUS DP adapter module user's manual	*3AFE68573271*
FSCA-01 RS-485 adapter module user's manual	*3AUA0000109533*
Flange mounting kit quick installation guide for ACX580-01 frames R0 to R5	*3AXD50000036610*
Flange mounting kit quick installation guide for ACX580-01 frames R6-R9	*3AXD50000019099*
Flange mounting kit installation supplement	*3AXD50000019100*

Tool and maintenance manuals and guides	
Drive composer PC tool user's manual	*3AUA0000094606*
Converter module capacitor reforming instructions	*3BFE64059629*
NETA-21 remote monitoring tool user's manual	*3AUA00000969391*
NETA-21 remote monitoring tool installation and start-up guide	*3AUA0000096881*

You can find manuals and other product documents in PDF format on the Internet. See section *Document library on the Internet* on the inside of the back cover. For manuals not available in the Document library, contact your local ABB representative.

The QR code below opens an online listing of the manuals applicable to this product.

ACS580-01 manuals

Table of contents

Frame R5

R5 Quick installation guide

Frames R6 to R9

R6…R9 Quick installation guide

Quick start-up guide

Quick start-up guide

Compliance with the European Machinery Directive 2006/42/EC

Installation figures

R1…R4 Figures A

R1…R4 Figures H

R5 Figures A

R5 Figures F

R6…R9 Figures A

R6…R9 Figures E

Further information

[Page intentionally left blank]

R1…R4 Ratings and fuses

|

Type ACS580-01	Input rating	Output ratings				Maximum heat dissipation	Frame size
		Nominal use		Heavy duty use			
	I_{1N}	I_{Ld}	P_{Ld}	I_{Hd}	P_{Hd}		
	A	A	hp	A	hp	W	
3-phase U_N = 480 V (440…480 V)							
02A1-4	2.1	2.1	1	1.6	0.75	45	R1
03A0-4	3	3	1.5	2.1	1	55	R1
03A5-4	3.5	3.5	2	3	1.5	66	R1
04A8-4	4.8	4.8	3	3.4	2	84	R1
06A0-4	6	6	3	4	3	106	R1
07A6-4	7.6	7.6	5	4.8	3	133	R1
012A-4	12	12	7.5	7.6	5	174	R1
014A-4	14	14	10	11	7.5	228	R2
023A-4	23	23	15	14	10	322	R2
027A-4	27	27	20	21	15	430	R3
034A-4	34	34	25	27	20	525	R3
044A-4	44	44	30	34	25	619	R3
052A-4	52	52	40	40	30	835	R4
065A-4	65	65	50	52	40	1024	R4

II

	NEC type ACS580	UL			
		I_N	Voltage rating	Bussmann type[1)]	UL class
		A	V		
R1-R4	**3-phase U_N = 480 V** (440…480 V)				
	02A1-4	15	600	JJS-15	T
	03A0-4	15	600	JJS-15	T
	03A5-4	15	600	JJS-15	T
	04A8-4	15	600	JJS-15	T
	06A0-4	15	600	JJS-15	T
	07A6-4	15	600	JJS-15	T
	012A-4	15	600	JJS-15	T
	014A-4	30	600	JJS-30	T
	023A-4	30	600	JJS-30	T
	027A-4	40	600	JJS-40	T
	034A-4	50	600	JJS-50	T
	044A-4	60	600	JJS-60	T
	052A-4	80	600	JJS-80	T
	065A-4	90	600	JJS-90	T

1) ABB does not require Bussmann brand fuses. Fuses which meet the appropriate UL class type, current rating, and are rated at 600V, 200 kA may be used.

R5 Ratings and fuses

I

NEC type ACS580 -01-	Input rating	Output ratings				Maximum heat dissipation	Frame size
		Nominal use		Heavy duty use			
	I_{1N}	I_{Ld}	P_{Ld}	I_{Hd}	P_{Hd}		
	A	A	hp	A	hp	W	
3-phase U_N = 480 V (440…480 V)							
077A-4	77	77	60	65	50	1240	R5
096A-4	96	96	75	77	60	1510	R5

R5

II

IEC type ACS580	UL			
	I_N	Voltage rating	Bussmann type[1)]	UL class
	A	V		
3-phase U_N = 480 V (440…480 V)				
077A-4	100	600	JJS-100	T
096A-4	150	600	JJS-150	T

1) ABB does not require Bussmann brand fuses. Fuses which meet the appropriate UL class type, current rating, and are rated at 600V, 200 kA may be used.

R5

[Page intentionally left blank]

R6…R9 Ratings and fuses

I

ACS580 -o1	Input rating	Output ratings				Maximum losses	Frame size
		Nominal use		Heavy duty use			
	I_{1N}	I_{2Ld}	P_{Ld}	I_{2Hd}	P_{Hd}		
	A	A	kW	A	kW	W	
3-phase U_N = 480 V (440…480 V)							
124A-4	124	124	100	96	75	1476	R6
156A-4	156	156	125	124	100	1976	R7
180A-4	180	180	150	156	125	2346	R7
240A-4	240	240	200	180	150	3336	R8
260A-4	260	260	200	240*	150	3936	R8
361A-4	361	361	300	302	250	4836	R9
414A-4	414	414	350	361**	300	6036	R9

* 130% overload only

** 125% overload only

II

ACS580 -01-	UL			
	I_N	Voltage rating	Bussmann type[1)]	UL class
	A	V		
3-phase U_N = 480 V (440…480 V)				
124A-4	200	600	JJS-200	T
156A-4	225	600	JJS-225	T
180A-4	300	600	JJS-300	T
240A-4	350	600	JJS-350	T
260A-4	400	600	JJS-400	T
361A-4	500	600	JJS-500	T
414A-4	600	600	JJS-600	T

1) ABB does not require Bussmann brand fuses. Fuses which meet the appropriate UL class type, current rating, and are rated at 600V, 200 kA may be used.

[Page intentionally left blank]

Quick installation guide
ACS580-01 drives
Frames R1 to R4

R1-R4

Power and productivity
for a better world™

[Page intentionally left blank]

R1…R4 Quick installation guide

This guide briefly describes how to install the drive. For complete information on installation, see *ACS580-01 (0.75 to 250 kW, 1.0 to 350 hp) hardware manual (3AXD50000018826* [English]). For start-up instructions, see chapter *Quick start-up guide* on page *55*.

To read a manual, go to www.abb.com/drives/documents and search for the document number.

Obey the safety instructions

WARNING! Obey these instructions. If you ignore them, injury or death, or damage to the equipment can occur:

- If you are not a qualified electrician, do not do electrical installation work.
- Do not work on the drive, motor cable or motor when main power is applied. If the drive is already connected to the input power, wait for 5 minutes after disconnecting the input power.
- Do not work on the control cables when power is applied to the drive or to the external control circuits.
- Make sure that debris from borings and grindings does not enter the drive when installing.
- Make sure that the floor below the drive and the wall where the drive is installed are non-flammable.

Check if capacitors need to be reformed

If the drive has not been powered (either in storage or unused) for over one year, you must reform the capacitors.

You can determine the manufacturing time from the serial number, which you find on the type designation label attached to the drive. The serial number is of format MYYWWRXXXX. YY and WW tell the manufacturing year and week as follows:

YY: 16, 17, 18, … for 2016, 2017, 2018, ...
WW: 01, 02, 03, … for week 1, week 2, week 3, ...

For information on reforming the capacitors, see *Converter module capacitor reforming instructions* (3BFE64059629 [English]), available on the Internet at www.abb.com/drives/documents.

Select the power cables

Size the power cables according to local regulations to carry the nominal current given on the type designation label of your drive.

R1-R4

Ensure the cooling

See table *I* on page *7* for the losses.The allowed operating temperature range of the drive is -15 to +50 °C (+5 to +122 °F). No condensation or frost is allowed. For more information on the ambient temperature and derating, see chapter *Technical data* in *ACS580-01 (0.75 to 250 kW, 1.0 to 350 hp) hardware manual (3AXD50000018826* [English]).

Protect the drive and input power cable

See table *II* on page *8* for the fuses.

If you use gG fuses, make sure that the operating time of the fuse is below 0.5 seconds. Follow the local regulations.

Install the drive on the wall

See figure *R1…R4 Figures A* on page *67*.

Check the insulation of the power cables and the motor

Check the insulation of the input cable according to local regulations before connecting it to the drive.

See figure *B1* on page *67*.

1. Check the insulation of the motor cable and motor when the cable is disconnected from the drive. Measure the insulation resistance between each phase conductor and then between each phase conductor and the Protective Earth conductor using a measuring voltage of 1000 V DC. The insulation resistance of an ABB motor must exceed 100 Mohm (reference value at 25 °C or 77 °F). For the insulation resistance of other motors, see the manufacturer's instructions.

Note: Moisture inside the motor casing will reduce the insulation resistance. If moisture is suspected, dry the motor and repeat the measurement.

Switch off the power and open the cover

See figure *B1* on page *67*.

2. Switch off the power from the drive.
3. Remove the front cover: Loosen the retaining screw, if any, with a screwdriver (3a) and lift the cover from the bottom outwards (3b) and then up (3c).

R1-R4

Install the cable box

Only for frames IP21, R1….R2 and IP55, R1….R2.

See figures *B1* and *B2* on page *67*.

4. IP21, R1….R2: Remove the screw (4a) and lift the cover off (4b) from the separate cable box.
5. IP21, R1….R2: Attach the cable box cover to the front cover.
6. IP21, R1….R2: Install the cable box to the frame. Position the cable box (6a) and tighten the screws (6b).

Attach the warning sticker

See figure *B2* on page *67*.

7. Attach the residual voltage warning sticker in the local language.

Check the compatibility with IT (ungrounded) and corner-grounded TN systems

EMC filter

The internal EMC filter is not suitable for use on an IT (ungrounded) system or on a corner-grounded TN system. Disconnect the EMC filter before connecting the drive to the supply network. Check the table on page *18*.

WARNING! Do not install the drive with the internal EMC filter connected on an IT system (an ungrounded power system or a high-resistance-grounded [over 30 ohms] power system), otherwise the system will be connected to ground potential through the EMC filter capacitors of the drive. This can cause danger, or damage the drive.

Do not install the drive with the internal EMC filter connected on a corner-grounded TN system, otherwise the drive will be damaged.

Note: When the internal EMC filter is disconnected, the drive EMC compatibility is considerably reduced.

Ground-to-phase varistor

The ground-to-phase varistor is not suitable for use on an IT (ungrounded) system. Disconnect the ground-to-phase varistor before connecting the drive to the supply network. Check the table on page *18*.

R1-R4

WARNING! Do not install the drive with the ground-to-phase varistor connected on an IT system (an ungrounded power system or a high-resistance-grounded [over 30 ohms] power system), otherwise the varistor circuit can be damaged.

Check from the table below if you have to disconnect the EMC filter (EMC) or ground-to-phase varistor (VAR). For instructions on how to do this, see page *19*.

Frame sizes	EMC filter (EMC)	Ground-to-phase varistor (VAR)	Symmetrically grounded TN systems (TN-S systems) [1]	Corner grounded TN systems [2]	IT systems (ungrounded or high-resistance grounded [>30 ohms]) [3]
R1…R3	EMC (1 screw)	-	Do not disconnect	Disconnect	Disconnect
	-	VAR (1 screw)	Do not disconnect	Disconnect	Disconnect
R4	EMC (2 screws)	-	Do not disconnect	Frame R4 cannot be used in corner grounded TN systems.	Disconnect
	-	VAR (1 screw)	Do not disconnect		Disconnect

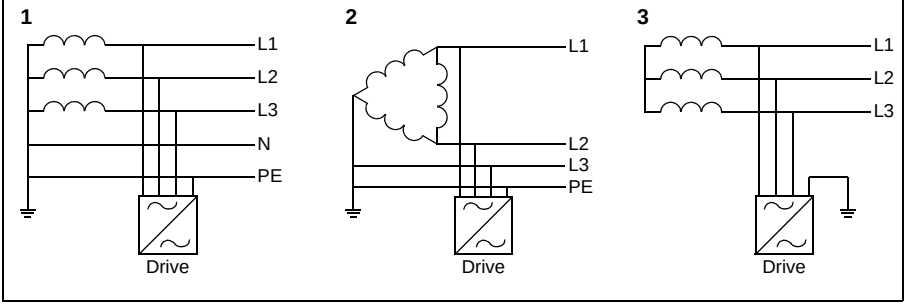

Disconnect EMC filter or ground-to-phase varistor, if needed

To disconnect the internal EMC filter or ground-to-phase varistor, if needed, do as follows:

1. Switch off the power from the drive.
2. Open the front cover, if not already opened, see figure *B1* on page *67*.
3. R1…R3: To disconnect the internal EMC filter, remove the EMC screw (3a) and place it in the storage place (3b).
   R4: To disconnect the internal EMC filter, remove the two EMC screws.
4. R1…R3: To disconnect the ground-to-phase varistor, remove the varistor screw (4a) and place it in the storage place (4b).
   R4: To disconnect the ground-to-phase varistor, remove the varistor screw.

R1…R2

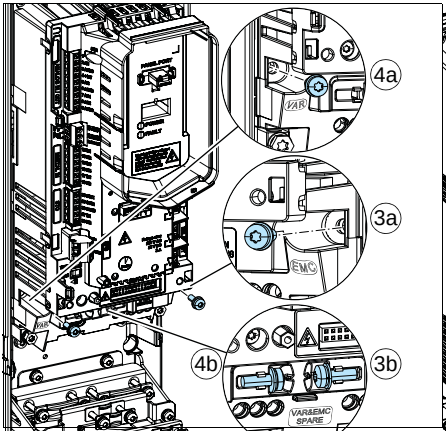

R3

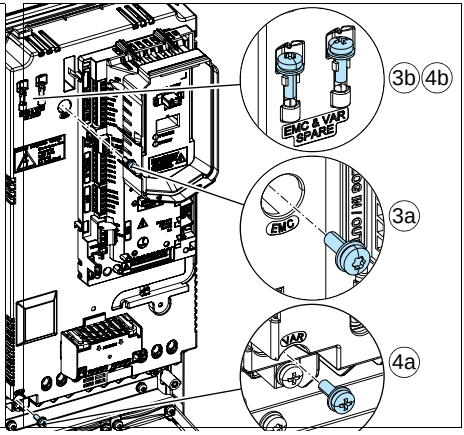

R4

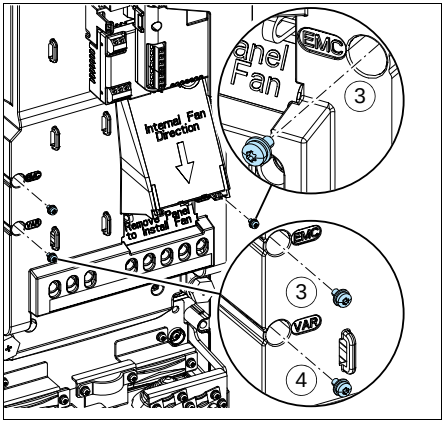

Wiring R1...R2

Note: These are instructions for conduit wiring. For cable wiring, see the *ACS580 Hardware manual*, publication number 3AXD50000018826.

R1-R4

Note: In US deliveries, options are already installed at the factory. If installing on site, option slot 1 modules (fieldbus adapter) may be installed by mounting the module on the control board and tightening the mounting screw, which is also the grounding screw. Option slot 2 modules (I/O extension) should not be installed until after the power cables. Refer to Warning and step 8 below.

WARNING! If installing modules, obey the instructions in Safety instructions in the *ACS580 Hardware manual*, publication number 3AXD50000018826. If you ignore them, injury or death, or damage to the equipment can occur. Option slot 2 in frames R1…R5 is at U_{DC} potential. You must disconnect power supplies before installing or removing an I/O extension module.

See figure on page *22*.

1. Install thin-wall conduit clamps for IP21/UL Type 1 or liquid-tight conduit connectors for IP55/UL Type 12 (not supplied). Type 12 has a Pressfit gasket.
2. Connect conduit runs for input power, motor and control cables to the conduit box. Ensure grommets (pointing down) are inserted into all unused holes.
3. Route the input power and motor wiring through separate conduits.
4. Strip wires.
5. Connect the motor and ground wires to the drive terminal. Tighten the screws to torques shown in the Power wiring torque table.
6. Connect the input power and ground wires to the drive terminal. Tighten the screws to torques shown in the Power wiring torque table.
7. *If brake resistor is used* — Connect the resistor and ground wires. Tighten the screws to torques shown in the Power wiring torque table.
8. Install option slot 2 modules (I/O extension), if necessary, at this point.
   - A *Frame R1 only:* Install the option mounting.
   - B Put the module carefully into its position on the control board and tighten the mounting screw.
   - C Tighten the grounding screw, which is necessary for proper operation and for fulfilling EMC requirements.

Note: Frame R1 — The module in option slot 2 covers the power terminals. Do not install a module in option slot 2 before you have installed the power cables.

9. Route the control cables through the conduit (not the same conduit as either input power or motor wiring).

10. Strip the control cable sheathing and twist the copper screen into a pig-tail.
11. Refer to page *27*. Connect the ground screen pig-tail for digital and analog I/O cables. (Ground only at drive end.)
12. Connect the ground screen pig-tail for Embedded fieldbus, EFB (EIA-485) cables at X5. (Ground only at drive end.)
13. Strip and connect the individual control wires to the drive terminals. Tighten the screws to 0.4 lb-ft (0.5…0.6 N-m).

WARNING! To avoid danger or damage to the drive on IT systems and corner grounded TN systems, see section *Check the compatibility with IT (ungrounded) and corner-grounded TN systems* on page *17*.

R1-R4

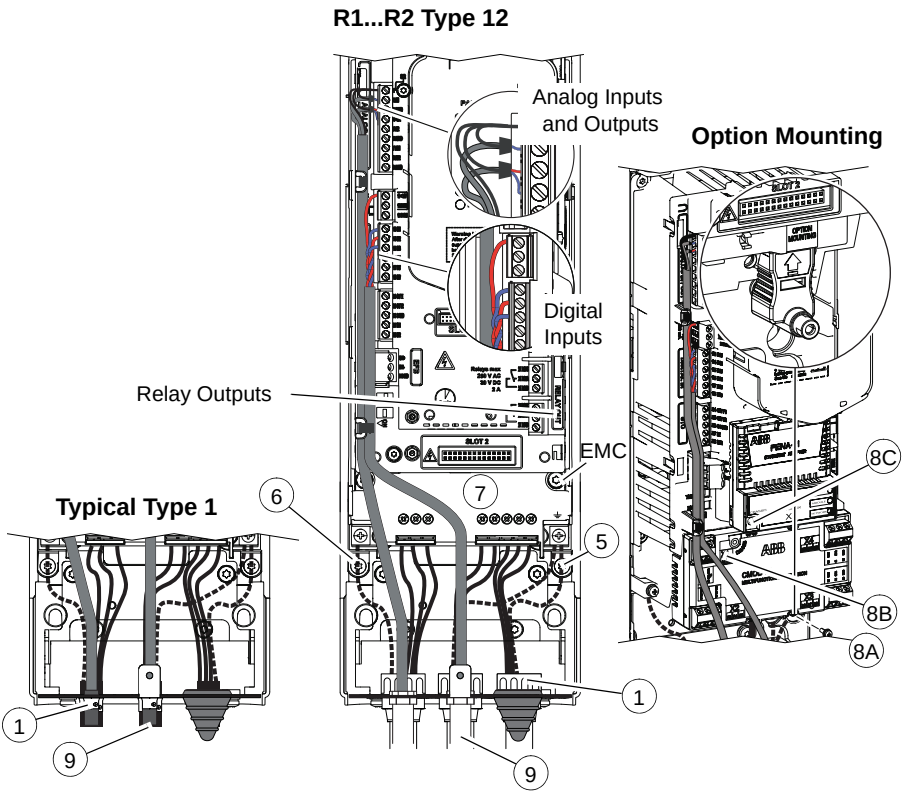

Power wiring torque table

Frame size	R1		R2	
	lb-ft	N-m	lb-ft	N-m
T1/U, T2/V, T3/W	0.4	1.2...1.5	1.1	1.2...1.5
L1, L2, L3	0.4	1.2...1.5	1.1	1.2...1.5
R+, R-	0.4	1.2...1.5	1.1	1.2...1.5
PE Ground	1.1	1.5	1.1	1.5

Wiring R3

Note: These are instructions for conduit wiring. For cable wiring, see the *ACS580 Hardware manual*, publication number 3AXD50000018826.

Note: In US deliveries, options are already installed at the factory. If installing on site, option slot 1 modules (fieldbus adapter) may be installed by mounting the module on the control board and tightening the mounting screw, which is also the grounding screw. Option slot 2 modules (I/O extension) may be installed by mounting the module on the control board and tightening both the mounting screw and the grounding screw. Refer to Warning.

WARNING! If installing modules, obey the instructions in Safety instructions in the *ACS580 Hardware manual*, publication number 3AXD50000018826. If you ignore them, injury or death, or damage to the equipment can occur. Option slot 2 in frames R1…R5 is at U_{DC} potential. You must disconnect power supplies before installing or removing an I/O extension module.

See figure on page *24*.

1. Install thin-wall conduit clamps for IP21/UL Type 1 or liquid-tight conduit connectors for IP55/UL Type 12 (not supplied). Type 12 has a Pressfit gasket.
2. Connect conduit runs for input power, motor and control cables to the conduit box. Ensure grommets (pointing down) are inserted into all unused holes.
3. Route the input power and motor wiring through separate conduits.
4. Strip wires.
5. Connect the motor and ground wires to the drive terminal. Tighten the screws to torques shown in the Power wiring torque table.
6. Connect the input power and ground wires to the drive terminal. Tighten the screws to torques shown in the Power wiring torque table.
7. *If brake resistor is used* — Connect the resistor and ground wires. Tighten the screws to torques shown in the Power wiring torque table.
8. Route the control cables through the conduit (not the same conduit as either input power or motor wiring).
9. Strip the control cable sheathing and twist the copper screen into a pig-tail.
10. Refer to page *27*. Connect the ground screen pig-tail for digital and analog I/O cables. (Ground only at drive end.)
11. Connect the ground screen pig-tail for Embedded fieldbus, EFB (EIA-485) cables at X5. (Ground only at drive end.)

12. Strip and connect the individual control wires to the drive terminals. Tighten the screws to 0.4 lb-ft (0.5…0.6 N-m).

R1-R4

WARNING! To avoid danger or damage to the drive on IT systems and corner grounded TN systems, see section *Check the compatibility with IT (ungrounded) and corner-grounded TN systems* on page *17*.

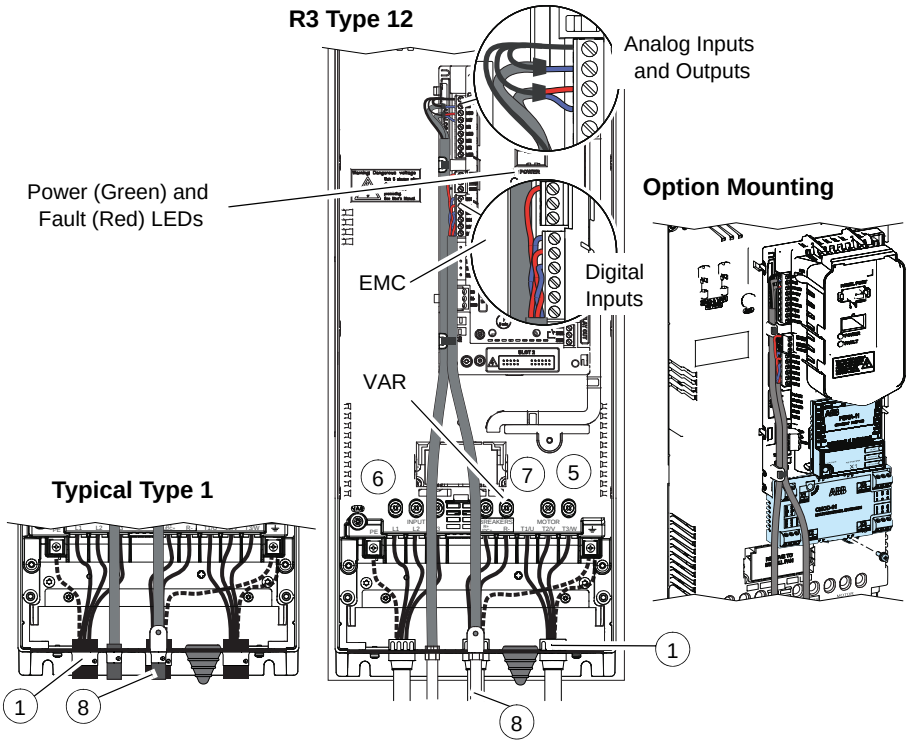

Power wiring torque table

Frame size	R3	
	lb-ft	N-m
T1/U, T2/V, T3/W	3.3	2.5...4.5
L1, L2, L3	3.3	2.5...4.5
R+, R-	3.3	2.5...4.5
PE Ground	1.1	1.5

Wiring R4

Note: These are instructions for conduit wiring. For cable wiring, see the *ACS580 Hardware manual*, publication number 3AXD50000018826.

Note: In US deliveries, options are already installed at the factory. If installing on site, option slot 1 modules (fieldbus adapter) may be installed by mounting the module on the control board and tightening the mounting screw, which is also the grounding screw. Option slot 2 modules (I/O extension) may be installed by mounting the module on the control board and tightening both the mounting screw and the grounding screw. Refer to Warning.

WARNING! If installing modules, obey the instructions in Safety instructions in the *ACS580 Hardware manual*, publication number 3AXD50000018826. If you ignore them, injury or death, or damage to the equipment can occur. Option slot 2 in frames R1…R5 is at U_{DC} potential. You must disconnect power supplies before installing or removing an I/O extension module.

See figure on page *26*.

1. Install thin-wall conduit clamps for IP21/UL Type 1 or liquid-tight conduit connectors for IP55/UL Type 12 (not supplied). Type 12 has a Pressfit gasket.
2. Connect conduit runs for input power, motor and control cables to the conduit box. Ensure grommets (pointed down) are inserted into all unused holes.
3. Route the input power and motor wiring through separate conduits.
4. Strip wires.
5. Connect the motor and ground wires to the drive terminal. Tighten the screws to torques shown in the Power wiring torque table.
6. Connect the input power and ground wires to the drive terminal. Tighten the screws to torques shown in the Power wiring torque table.
7. Route the control cables through the conduit (not the same conduit as either input power or motor wiring).
8. Strip the control cable sheathing and twist the copper screen into a pig-tail.
9. Refer to page *27*. Connect the ground screen pig-tail for digital and analog I/O cables. (Ground only at drive end.)
10. Connect the ground screen pig-tail for Embedded fieldbus, EFB (EIA-485) cables at X5. (Ground only at drive end.)
11. Strip and connect the individual control wires to the drive terminals. Tighten the screws to 0.4 lb-ft (0.5…0.6 N-m).

WARNING! To avoid danger or damage to the drive on IT systems and corner grounded TN systems, see section *Check the compatibility with IT (ungrounded) and corner-grounded TN systems* on page *17*.

R1-R4

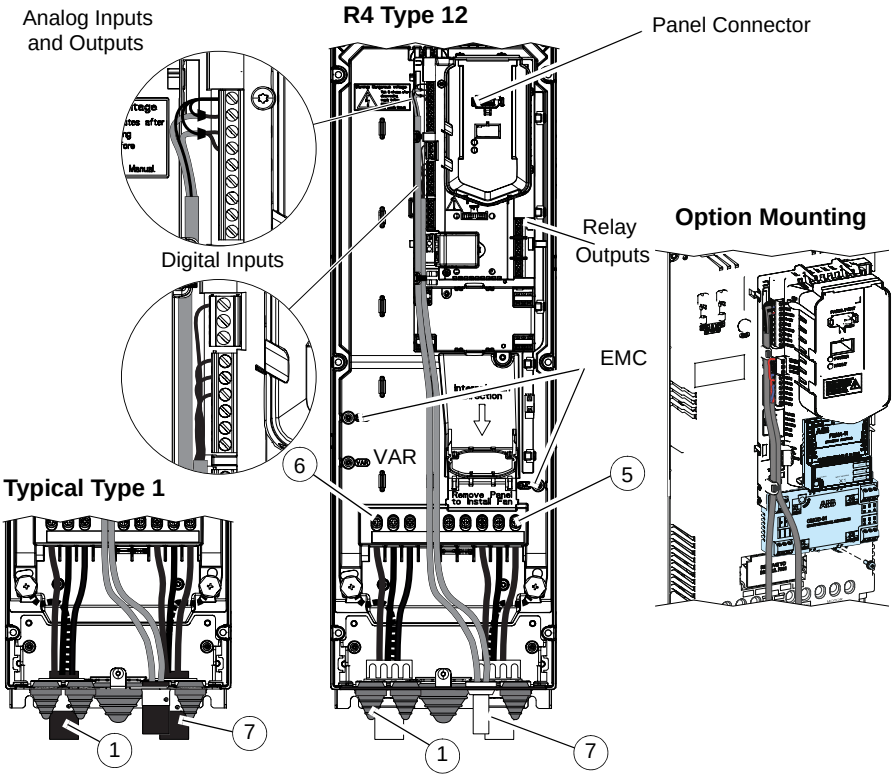

Note: UDC+ and UDC- terminals are used for external brake chopper units.

Power wiring torque table

Frame size	R4	
	lb-ft	N-m
T1/U, T2/V, T3/W	3.0	4.0
L1, L2, L3	3.0	4.0
UDC+ and UDC-	3.0	4.0
PE Ground	1.1	1.5

R1-R4

Default I/O connections

Default I/O connections of the ABB Standard macro are shown below.

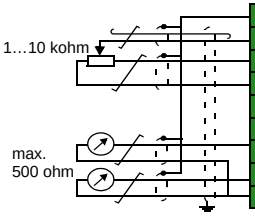

X1	Reference voltage and analog inputs and outputs	
1	SCR	Signal cable shield (screen)
2	AI1	**Output frequency/speed reference**: 0…10 V
3	AGND	Analog input circuit common
4	+10V	Reference voltage 10 V DC
5	AI2	Not configured
6	AGND	Analog input circuit common
7	AO1	**Output frequency:** 0…20 mA
8	AO2	**Output current:** 0…20 mA
9	AGND	Analog output circuit common
X2 & X3	Aux. voltage output and programmable digital inputs	
10	+24V	Aux. voltage output +24 V DC, max. 250 mA
11	DGND	Aux. voltage output common
12	DCOM	Digital input common for all
13	DI1	**Stop (0) / Start (1)**
14	DI2	**Forward (0) / Reverse (1)**
15	DI3	**Constant frequency/speed selection**
16	DI4	**Constant frequency/speed selection**
17	DI5	**Ramp set 1 (0) / Ramp set 2 (1)**
18	DI6	Not configured
X6, X7, X8	Relay outputs	
19	RO1C	**Ready run** 250 V AC / 30 V DC 2 A
20	RO1A	
21	RO1B	
22	RO2C	**Running** 250 V AC / 30 V DC 2 A
23	RO2A	
24	RO2B	
25	RO3C	**Fault (-1)** 250 V AC / 30 V DC 2 A
26	RO3A	
27	RO3B	
X5	EIA-485 Modbus RTU	
29	B+	Embedded Modbus RTU (EIA-485)
30	A-	
31	DGND	
S4	TERM	Serial data link termination switch
S5	BIAS	Serial data link bias resistors switch
X4	Safe torque off	
34	OUT1	Safe torque off. Factory connection. Both circuits must be closed for the drive to start. See chapter *The Safe torque off function* in *ACS580-01 (0.75 to 250 kW, 1.0 to 350 hp) hardware manual (3AXD50000018826* [English]).
35	OUT2	
36	SGND	
37	IN1	
38	IN2	

Total load capacity of the Auxiliary voltage output +24V (X2:10) is 6.0 W (250 mA / 24 V DC).

Wire sizes:
0.2…2.5 mm^2 (24…14 AWG): Terminals +24V, DGND, DCOM, B+, A-, DGND, Ext. 24V
0.14…1.5 mm^2 (26…16 AWG): Terminals DI, AI, AO, AGND, RO, STO

Tightening torques: 0.5…0.6 N·m (0.4 lbf·ft)

Install optional modules, if any

See chapter *Electrical installation* in *ACS580-01 (0.75 to 250 kW, 1.0 to 350 hp) hardware manual (3AXD50000018826* [English]).

R1-R4

Reinstall cover

See figure *J* on page *70*.

1. Put the tabs on the inside of the cover top in their counterparts on the housing (1a) and then press the cover at the bottom (1b).
2. Tighten the retaining screw with a screwdriver.

For start-up instructions, see chapter *Quick start-up guide* on page *55*.

ABB general purpose drives

Quick installation guide
ACS580-01 drives
Frame R5

R5

Power and productivity
for a better world™

[Page intentionally left blank]

R5 Quick installation guide

This guide briefly describes how to install the drive. For complete information on installation, see *ACS580-01 (0.75 to 250 kW, 1.0 to 350 hp) hardware manual (3AXD50000018826* [English]). For start-up instructions, see chapter *Quick start-up guide* on page *55*.

To read a manual, go to www.abb.com/drives/documents and search for the document number.

Obey the safety instructions

WARNING! Obey these instructions. If you ignore them, injury or death, or damage to the equipment can occur:

- If you are not a qualified electrician, do not do electrical installation work.
- Do not work on the drive, motor cable or motor when main power is applied. If the drive is already connected to the input power, wait for 5 minutes after disconnecting the input power.
- Do not work on the control cables when power is applied to the drive or to the external control circuits.
- Make sure that debris from borings and grindings does not enter the drive when installing.
- Make sure that the floor below the drive and the wall where the drive is installed are non-flammable.

Check if capacitors need to be reformed

If the drive has not been powered (either in storage or unused) for over one year, you must reform the capacitors.

You can determine the manufacturing time from the serial number, which you find on the type designation label attached to the drive. The serial number is of format MYYWWRXXXX. YY and WW tell the manufacturing year and week as follows:

YY: 16, 17, 18, … for 2016, 2017, 2018, ...
WW: 01, 02, 03, … for week 1, week 2, week 3, ...

For information on reforming the capacitors, see *Converter module capacitor reforming instructions* (3BFE64059629 [English]), available on the Internet at www.abb.com/drives/documents.

Select the power cables

Size the power cables according to local regulations to carry the nominal current given on the type designation label of your drive.

Ensure the cooling

R5

See table *I* on page *9* for the losses. The allowed operating temperature range of the drive is -15 to +50 °C (+5 to +122 °F).No condensation or frost is allowed. For more information on the ambient temperature and derating, see chapter *Technical data* in *ACS580-01 (0.75 to 250 kW, 1.0 to 350 hp) hardware manual (3AXD50000018826* [English]).

Protect the drive and input power cable

See table *II* on page *9* for the fuses.

If you use gG fuses, make sure that the operating time of the fuse is below 0.5 seconds. Follow the local regulations.

Install the drive on the wall

See figure *R5 Figures A* on page *71*.

Check the insulation of the power cables and the motor

Check the insulation of the input cable according to local regulations before connecting it to the drive.

See figure *B* on page *71*.

1. Check the insulation of the motor cable and motor when the cable is disconnected from the drive. Measure the insulation resistance between each phase conductor and then between each phase conductor and the Protective Earth conductor using a measuring voltage of 1000 V DC. The insulation resistance of an ABB motor must exceed 100 Mohm (reference value at 25 °C or 77 °F). For the insulation resistance of other motors, see the manufacturer's instructions.

Note: Moisture inside the motor casing will reduce the insulation resistance. If moisture is suspected, dry the motor and repeat the measurement.

Switch off the power and open the cover

See figure *B* on page *71*.

2. Switch off the power from the drive.
3. IP21, Remove the module cover: Loosen the retaining screws with a screwdriver (3a) and lift the cover from the bottom outwards (3b) and then up (3c).
4. IP21, Remove the box cover: Loosen the retaining screws with a screwdriver (4a) and slide the cover downwards (4b).
5. IP55, Remove the front cover: Loosen the retaining screws with a screwdriver (4a) and lift the cover from the bottom outwards (4b) and then up (4c).

Check the compatibility with IT (ungrounded) and corner-grounded TN systems

EMC filter

The internal EMC filter is not suitable for use on an IT (ungrounded) system or on a corner-grounded TN system. Disconnect the EMC filter before connecting the drive to the supply network. Check the table on page *34*.

WARNING! Do not install the drive with the internal EMC filter connected on an IT system (an ungrounded power system or a high-resistance-grounded [over 30 ohms] power system), otherwise the system will be connected to ground potential through the EMC filter capacitors of the drive. This can cause danger, or damage the drive.

Do not install the drive with the internal EMC filter connected on a corner-grounded TN system, otherwise the drive will be damaged.

Note: When the internal EMC filter is disconnected, the drive EMC compatibility is considerably reduced.

Ground-to-phase varistor

The ground-to-phase varistor is not suitable for use on an IT (ungrounded) system. Disconnect the ground-to-phase varistor before connecting the drive to the supply network. Check the table on page *34*.

WARNING! Do not install the drive with the ground-to-phase varistor connected on an IT system (an ungrounded power system or a high-resistance-grounded [over 30 ohms] power system), otherwise the varistor circuit can be damaged.

Check from the table below if you have to disconnect the EMC filter (EMC) or ground-to-phase varistor (VAR). For instructions on how to do this, see page *35*.

R5

Frame sizes	EMC filter (EMC)	Ground-to-phase varistor (VAR)	Symmetrically grounded TN systems (TN-S systems) [1]	Corner grounded TN systems [2]	IT systems (ungrounded or high-resistance grounded [>30 ohms]) [3]
R5	EMC (2 screws)	-	Do not disconnect	Frame R5 cannot be used in corner grounded TN systems.	Disconnect
	-	VAR (1 screw)	Do not disconnect		Disconnect

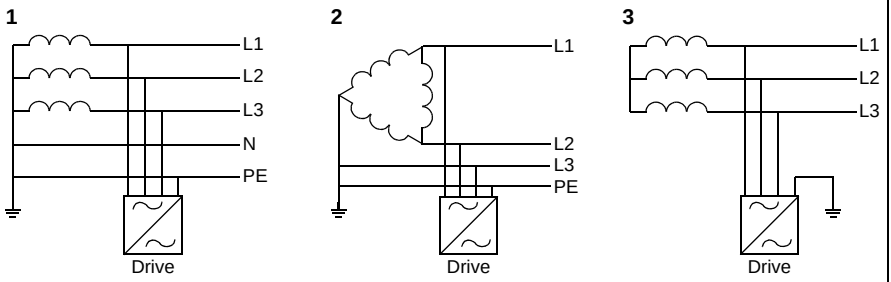

Disconnect EMC filter or ground-to-phase varistor, if needed

To disconnect the internal EMC filter or ground-to-phase varistor, if needed, do as follows:

1. Switch off the power from the drive.
2. Open the front cover, if not already opened, see figure *B* on page *71*.
3. To disconnect the internal EMC filter, remove the two EMC screws.
4. To disconnect the ground-to-phase varistor, remove the varistor screw.

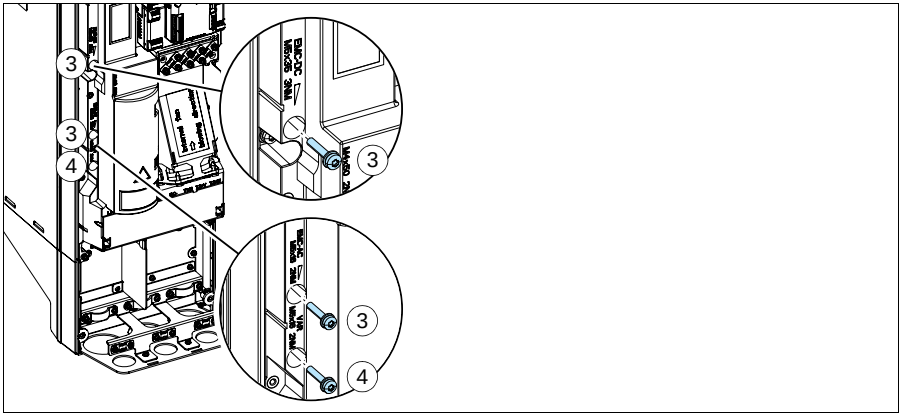

Wiring R5

Note: These are instructions for conduit wiring. For cable wiring, see the *ACS580 Hardware manual*, publication number 3AXD50000018826.

Note: In US deliveries, options are already installed at the factory. If installing on site, option slot 1 modules (fieldbus adapter) may be installed by mounting the module on the control board and tightening the mounting screw, which is also the grounding screw. Option slot 2 modules (I/O extension) may be installed by mounting the module on the control board and tightening both the mounting screw and the grounding screw. Refer to Warning.

WARNING! If installing modules, obey the instructions in Safety instructions in the *ACS580 Hardware manual*, publication number 3AXD50000018826. If you ignore them, injury or death, or damage to the equipment can occur. Option slot 2 in frames R1…R5 is at U_{DC} potential. You must disconnect power supplies before installing or removing an I/O extension module.

See figure on page 37.

1. Install thin-wall conduit clamps for IP21/UL Type 1 or liquid-tight conduit connectors for IP55/UL Type 12 (not supplied). Type 12 has a Pressfit gasket.
2. Connect conduit runs for input power, motor and control cables to the conduit box. Ensure grommets (pointing down) are inserted into all unused holes.

R5

3. Route the input power and motor wiring through separate conduits.
4. Strip wires.
5. Connect the motor and ground wires to the drive terminal. Tighten the screws to torques shown in the Power wiring torque table.
6. Connect the input power and ground wires to the drive terminal. Tighten the screws to torques shown in the Power wiring torque table.
7. Reinstall the shroud on the power terminals by putting the tabs at the top of the shroud in their counterparts on the drive frame and then pressing the shroud in place.

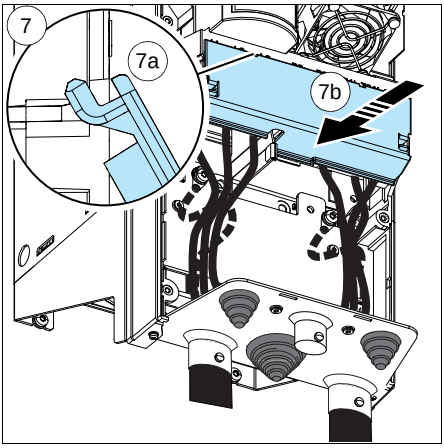

8. Route the control cables through the conduit (not the same conduit as either input power or motor wiring).
9. Strip the control cable sheathing and twist the copper screen into a pig-tail.
10. Refer to page 38. Connect the ground screen pig-tail for digital and analog I/O cables. (Ground only at drive end.)
11. Connect the ground screen pig-tail for Embedded fieldbus, EFB (EIA-485) cables at X5. (Ground only at drive end.)
12. Strip and connect the individual control wires to the drive terminals. Tighten the screws to 0.4 lb-ft (0.5…0.6 N-m).

WARNING! To avoid danger or damage to the drive on IT systems and corner grounded TN systems, see section *Check the compatibility with IT (ungrounded) and corner-grounded TN systems* on page *33*.

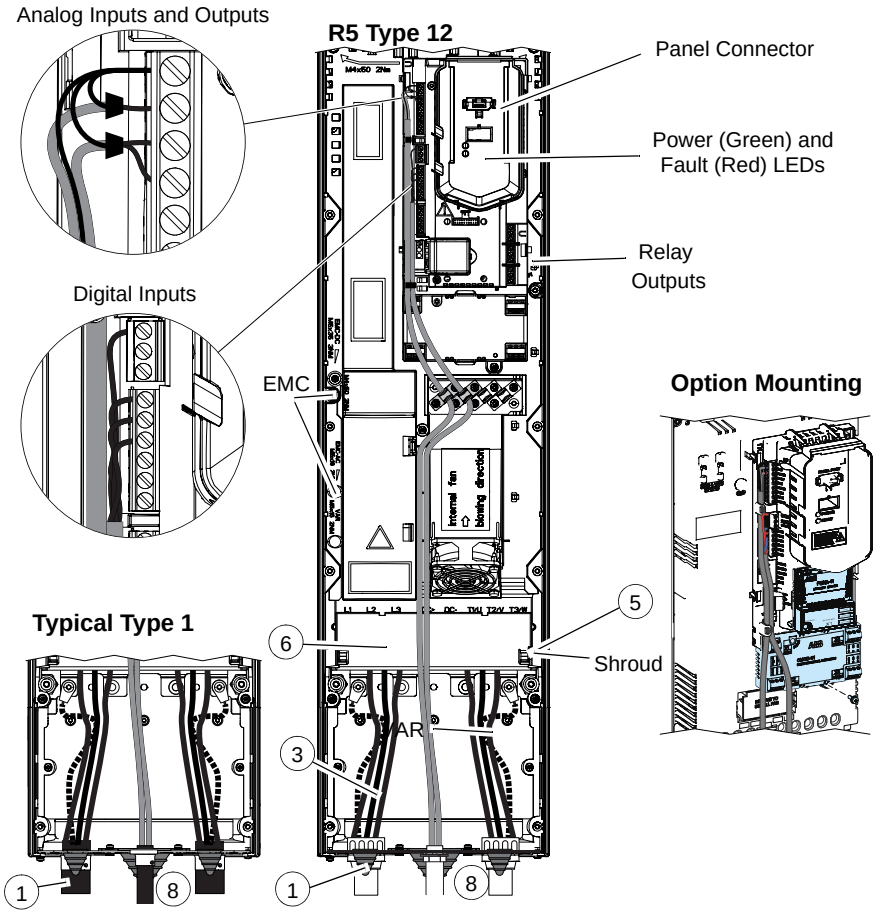

Note: UDC+ and UDC- terminals are used for external brake chopper units.

Power wiring torque table

Frame size	R5	
	lb-ft	N-m
T1/U, T2/V, T3/W	4.1	5.6
L1, L2, L3	4.1	5.6
UDC+ and UDC-	4.1	5.6
PE Ground	1.1	1.5

R5

Default I/O connections

Default I/O connections of the ABB Standard macro are shown below.

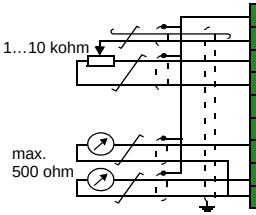

X1	Reference voltage and analog inputs and outputs	
1	SCR	Signal cable shield (screen)
2	AI1	**Output frequency/speed reference**: 0…10 V
3	AGND	Analog input circuit common
4	+10V	Reference voltage 10 V DC
5	AI2	Not configured
6	AGND	Analog input circuit common
7	AO1	**Output frequency:** 0…20 mA
8	AO2	**Output current:** 0…20 mA
9	AGND	Analog output circuit common
X2 & X3	Aux. voltage output and programmable digital inputs	
10	+24V	Aux. voltage output +24 V DC, max. 250 mA
11	DGND	Aux. voltage output common
12	DCOM	Digital input common for all
13	DI1	**Stop (0) / Start (1)**
14	DI2	**Forward (0) / Reverse (1)**
15	DI3	**Constant frequency/speed selection**
16	DI4	**Constant frequency/speed selection**
17	DI5	**Ramp set 1 (0) / Ramp set 2 (1)**
18	DI6	Not configured
X6, X7, X8	Relay outputs	
19	RO1C	**Ready run** 250 V AC / 30 V DC 2 A
20	RO1A	
21	RO1B	
22	RO2C	**Running** 250 V AC / 30 V DC 2 A
23	RO2A	
24	RO2B	
25	RO3C	**Fault (-1)** 250 V AC / 30 V DC 2 A
26	RO3A	
27	RO3B	
X5	EIA-485 Modbus RTU	
29	B+	Embedded Modbus RTU (EIA-485)
30	A-	
31	DGND	
S4	TERM	Serial data link termination switch
S5	BIAS	Serial data link bias resistors switch
X4	Safe torque off	
34	OUT1	Safe torque off. Factory connection. Both circuits must be closed for the drive to start. See chapter *The Safe torque off function* in *ACS580-01 (0.75 to 250 kW, 1.0 to 350 hp) hardware manual (3AXD50000018826* [English]).
35	OUT2	
36	SGND	
37	IN1	
38	IN2	

Total load capacity of the Auxiliary voltage output +24V (X2:10) is 6.0 W (250 mA / 24 V DC).

Wire sizes:
0.2…2.5 mm^2 (24…14 AWG): Terminals +24V, DGND, DCOM, B+, A-, DGND, Ext. 24V
0.14…1.5 mm^2 (26…16 AWG): Terminals DI, AI, AO, AGND, RO, STO

Tightening torques: 0.5…0.6 N·m (0.4 lbf·ft)

Install optional modules, if any

See chapter *Electrical installation* in *ACS580-01 (0.75 to 250 kW, 1.0 to 350 hp) hardware manual (3AXD50000018826* [English]).

Reinstall cover

See figure *H* on page *74*.

1. IP21, Reinstall the box cover: Slide the cover upwards (1a) and tighten the retaining screws (1b).
2. IP21, Reinstall the module cover: Put the tabs on the inside of the cover top in their counterparts on the housing (2a), press the cover at the bottom (2b) and tighten the retaining screws (2c).
3. IP55, Reinstall the front cover: Put the tabs on the inside of the cover top in their counterparts on the housing (3a), press the cover at the bottom (3a) and tighten the retaining screws (3b).

For start-up instructions, see chapter *Quick start-up guide* on page *55*.

[Page intentionally left blank]

ABB general purpose drives

Quick installation guide
ACS580-01 drives
Frames R6 to R9

R6-
R9

Power and productivity
for a better world™

[Page intentionally left blank]

R6…R9 Quick installation guide

This guide briefly describes how to install the drive. For complete information on installation, see *ACS580-01 (0.75 to 250 kW) hardware manual* (3AXD50000018826 [English]). For start-up instructions, see chapter *Quick start-up guide* on page *55*.

To read a manual, go to www.abb.com/drives/documents and search for the document number.

Obey the safety instructions

WARNING! Obey these instructions. If you ignore them, injury or death, or damage to the equipment can occur:

- If you are not a qualified electrician, do not do electrical installation work.
- Do not work on the drive, motor cable or motor when main power is applied. If the drive is already connected to the input power, wait for 5 minutes after disconnecting the input power.
- Do not work on the control cables when power is applied to the drive or to the external control circuits.
- Use the lifting eyes of the drive when you lift the drive. Do not tilt the drive. The drive is heavy and its center of gravity is high. An overturning drive can cause physical injury.
- Make sure that debris from borings and grindings does not enter the drive when installing.
- Make sure that the floor below the drive and the wall where the drive is installed are non-flammable.

Check if capacitors need to be reformed

If the drive has not been powered (either in storage or unused) for over one year, you must reform the capacitors.

You can determine the manufacturing time from the serial number, which you find on the type designation label attached to the drive. The serial number is of format MYYWWRXXXX. YY and WW tell the manufacturing year and week as follows:

YY: 13, 14, 15, … for 2013, 2014, 2015, ...
WW: 01, 02, 03, … for week 1, week 2, week 3, ...

For information on reforming the capacitors, see *Converter module capacitor reforming instructions* (3BFE64059629 [English]), available on the Internet at www.abb.com/drives/documents.

Select the power cables

Size the power cables according to local regulations to carry the nominal current given on the type designation label of your drive.

R6-R9

Ensure the cooling

See table *I* on page *11* for the losses. The allowed operating temperature range of the drive is -15 to +50 °C (+5 to +122 °F). No condensation or frost is allowed. For more information on the ambient temperature and derating, see chapter *Technical data* in *ACS580-01 (0.75 to 250 kW) hardware manual* (3AXD50000018826 [English]).

Protect the drive and input power cable

See table *II* on page *11* for the fuses.

If you use gG fuses, make sure that the operating time of the fuse is below 0.5 seconds. Follow the local regulations.

Install the drive on the wall

Warning! The drive module is heavy (42 to 103 kg / 93 to 227 lb). Use a suitable lifting device. Do not lift the module manually. Make sure that the wall and the fixing devices can carry the weight.

See figure *R6…R9 Figures A* on page *75*.

Check the insulation of the power cables and the motor

Check the insulation of the input cable according to local regulations before connecting it to the drive.

See figure *B* on page *75.*

1. Check the insulation of the motor cable and motor before connecting it to the drive. Measure the insulation resistance between each phase conductor and then between each phase conductor and the Protective Earth conductor using a measuring voltage of 1000 V DC. The insulation resistance of an ABB motor must exceed 100 Mohm (reference value at 25 °C or 77 °F). For the insulation resistance of other motors, see the manufacturer's instructions.

Note: Moisture inside the motor casing will reduce the insulation resistance. If moisture is suspected, dry the motor and repeat the measurement.

Check the compatibility with IT (ungrounded) and corner-grounded TN systems

EMC filter

The internal EMC filter is not suitable for use on an IT (ungrounded) system or on a corner-grounded TN system. Disconnect the EMC filter before connecting the drive to the supply network. Check the table on page *46*.

WARNING! Do not install the drive with the internal EMC filter connected on an IT system (an ungrounded power system or a high-resistance-grounded [over 30 ohms] power system), otherwise the system will be connected to ground potential through the EMC filter capacitors of the drive. This can cause danger, or damage the drive.

Do not install the drive with the internal EMC filter connected on a corner-grounded TN system, otherwise the drive will be damaged.

Note: When the internal EMC filter is disconnected, the drive EMC compatibility is considerably reduced.

Ground-to-phase varistor

The ground-to-phase varistor is not suitable for use on an IT (ungrounded) system. Disconnect the ground-to-phase varistor before connecting the drive to the supply network. Check the table on page *46*.

WARNING! Do not install the drive with the ground-to-phase varistor connected on an IT system (an ungrounded power system or a high-resistance-grounded [over 30 ohms] power system), otherwise the varistor circuit can be damaged.

Check from the table below if you have to disconnect the EMC filter (EMC) or ground-to-phase varistor (VAR). For instructions on how to do this, see page *47*.

R6-R9

Frame sizes	EMC filter (EMC)	Ground-to-phase varistor (VAR)	Symmetrically grounded TN systems (TN-S systems) [1]	Corner grounded TN systems [2]	IT systems (ungrounded or high-resistance grounded [>30 ohms]) [3]
R6…R9	EMC (2 screws)	-	Do not disconnect	Disconnect	Disconnect
	-	VAR (1 screw)	Do not disconnect	Do not disconnect	Disconnect

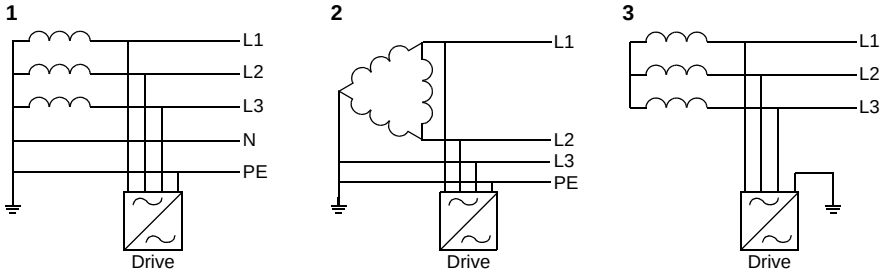

Disconnect EMC filter or ground-to-phase varistor, if needed

To disconnect the internal EMC filter or ground-to-phase varistor, if needed, do as follows:

1. Switch off the power from the drive.
2. Open the front cover, if not already opened, see steps 5, IP21 and 5, IP55 in figure *R6…R9 Figures A* on page *75.*
3. To disconnect the internal EMC filter, remove the two EMC screws.
4. To disconnect the ground-to-phase varistor, remove the varistor screw.

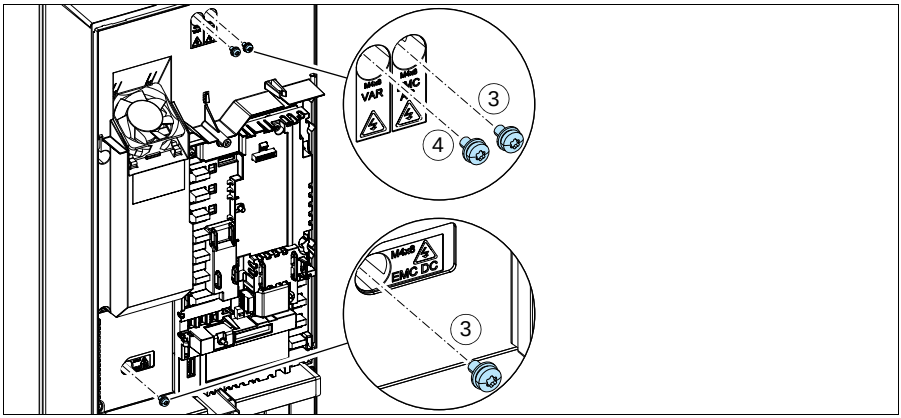

Wiring R6…R9

Note: These are instructions for conduit wiring. For cable wiring, see the *ACS580 Hardware manual*, publication number 3AXD50000018826.

Note: In US deliveries, options are already installed at the factory. If installing on site, see the appropriate option module manual for specific installation and wiring.

See figure on page *49*.

R6-R9

1. Install thin-wall conduit clamps for IP21/UL Type 1 or liquid-tight conduit connectors for IP55/UL Type 12 (not supplied). Type 12 has a Pressfit gasket.
2. Connect conduit runs for input power, motor and control cables to the conduit box. Ensure grommets (pointing down) are inserted into all unused holes.
3. Route the input power and motor wiring through separate conduits.
4. Strip wires.
5. Connect the motor and ground wires to the drive terminal. Tighten the screws to torques shown in the Power wiring torque table.

Note: *Frames R8…R9* — If you connect only one conductor to the connector, we recommend that you put it under the upper pressure plate.

6. Connect the input power and ground wires to the drive terminal. Tighten the screws to torques shown in the Power wiring torque table.
7. *Frames R8…R9* — If parallel cables are used, install the parallel power cables.
8. Reinstall the shroud on the power terminals and the conduit box side plates.
9. Route the control cables through the conduit (not the same conduit as either input power or motor wiring).
10. Strip the control cable sheathing and twist the copper screen into a pig-tail.
11. Refer to page *50*. Connect the ground screen pig-tail for digital and analog I/O cables. (Ground only at drive end.)
12. Connect the ground screen pig-tail for Embedded fieldbus, EFB (EIA-485) cables at X5. (Ground only at drive end.)
13. Strip and connect the individual control wires to the drive terminals. Tighten the screws to 0.4 lb-ft (0.5…0.6 N-m).

WARNING! To avoid danger or damage to the drive on IT systems and corner grounded TN systems, see section *Check the compatibility with IT (ungrounded) and corner-grounded TN systems* on page *45*.

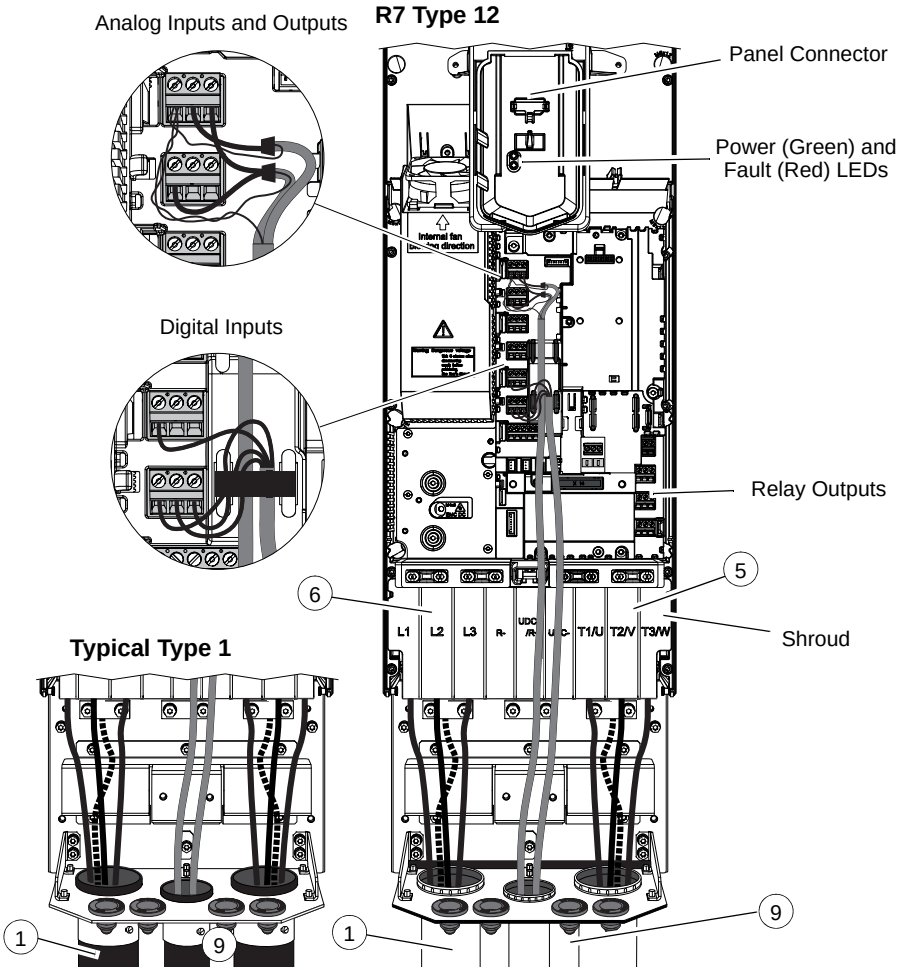

Note: UDC+ and UDC- terminals are used for external brake chopper units.

Power wiring torque table

Frame size	R6		R7		R8		R9	
	lb-ft	N-m	lb-ft	N-m	lb-ft	N-m	lb-ft	N-m
T1/U, T2/V, T3/W	22.1	30	29.5	40	29.6	40	51.6	70
L1, L2, L3	22.1	30	29.5	40	29.6	40	51.6	70
UDC+ and UDC-	22.1	30	29.5	30	29.5	40	51.6	70
PE Ground	1.1	1.5	1.1	1.5	1.1	1.5	1.1	1.5

Default I/O connections

Default I/O connections of the ABB Standard macro are shown below.

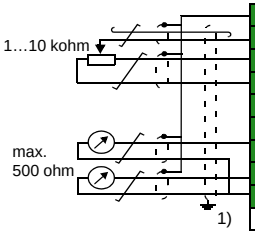

R6-R9

S1	AI1 U/I	Voltage/Current selection for AI1: U I
S2	AI2 U/I	Voltage/Current selection for AI2: U I
X1	Reference voltage and analog inputs and outputs	
1	SCR	Signal cable shield (screen)
2	AI1	**Output frequency/speed reference**: 0…10 V
3	AGND	Analog input circuit common
4	+10V	Reference voltage 10 V DC
5	AI2	Not configured
6	AGND	Analog input circuit common
7	AO1	**Output frequency:** 0…20 mA
8	AO2	**Output current:** 0…20 mA
9	AGND	Analog output circuit common
S3	AO1 I/U	Voltage/Current selection for AO1: I U
X2 & X3	Aux. voltage output and programmable digital inputs	
10	+24V	Aux. voltage output +24 V DC, max. 250 mA
11	DGND	Aux. voltage output common
12	DCOM	Digital input common for all
13	DI1	**Stop (0) / Start (1)**
14	DI2	**Forward (0) / Reverse (1)**
15	DI3	**Constant frequency/speed selection**
16	DI4	**Constant frequency/speed selection**
17	DI5	**Ramp set 1 (0) / Ramp set 2 (1)**
18	DI6	Not configured
X6, X7, X8	Relay outputs	
19	RO1C	**Ready run** 250 V AC / 30 V DC 2 A
20	RO1A	
21	RO1B	
22	RO2C	**Running** 250 V AC / 30 V DC 2 A
23	RO2A	
24	RO2B	
25	RO3C	**Fault (-1)** 250 V AC / 30 V DC 2 A
26	RO3A	
27	RO3B	
X5	EIA-485 Modbus RTU	
29	B+	Embedded Modbus RTU (EIA-485)
30	A-	
31	DGND	
S4	TERM	Serial data link termination switch
S5	BIAS	Serial data link bias resistors switch
X4	Safe torque off	
34	OUT1	Safe torque off. Factory connection. Both circuits must be closed for the drive to start. See chapter *The Safe torque off function* in *ACS580-01 (0.75 to 250 kW) hardware manual* (3AXD50000018826 [English]).
35	OUT2	
36	SGND	
37	IN1	
38	IN2	
X10	24 V AC/DC	
40	24 V AC/DC+ in	Ext. 24V AC/DC input to power up the control unit when the main supply is disconnected.
41	24 V AC/DC- in	

1) All control boards do not have switches S1, S2 and S3. In that case, select voltage or current for inputs AI1 and AI2 and output AO1 with parameters. See the firmware manual.

Total load capacity of the Auxiliary voltage output +24V (X2:10) is 6.0 W (250 mA / 24 V DC).

Wire sizes: 0.14…2.5 mm^2 (26…16 AWG): All terminals

Tightening torques: 0.5…0.6 N·m (0.4 lbf·ft)

Install optional modules, if any

See chapter *Electrical installation* in *ACS580-01 (0.75 to 250 kW) hardware manual* (3AXD50000018826 [English]).

Install side plates and covers

See figure *R6…R9 Figures E* on page *77*.

IP21

1. Reinstall the side plates of the cable entry box. Tighten the retaining screws with a screwdriver.
2. Slide the cover of the cable entry box on the module from below until the cover snaps into place.
3. Reinstall the module cover. Tighten the two retaining screws with a screwdriver.

IP55

1. Reinstall the module cover. Tighten the two retaining screws with a screwdriver.

For start-up instructions, see chapter *Quick start-up guide* on page *55*.

[Page intentionally left blank]

ABB general purpose drives

Quick start-up guide
ACS580-01 drives
Frames R1 to R9

R1-R4

R5

R6-R9

Power and productivity
for a better world™

[Page intentionally left blank]

Quick start-up guide

This guide describes how to start-up the drive using the First start assistant on the assistant control panel.

Before you start

Ensure that the drive has been installed as described in chapter *R1…R4 Quick installation guide* on page *15*, in chapter *R5 Quick installation guide* page *31* or in chapter *R6…R9 Quick installation guide* on page *43*.

Start-up with the First start assistant on an assistant control panel

	Safety	
☐	Make sure that the installation work is complete. Make sure that cover of the drive and the cable box, if included, are on place.	
☐	⚠ Check that the starting of the motor does not cause any danger. **De-couple the driven machine** if there is a risk of damage in case of an incorrect direction of rotation.	
	Hints on using the assistant control panel	
	The two commands at the bottom of the display (**Options** and **Menu** in the figure on the right), show the functions of the two softkeys ⊟ and ⊟ located below the display. The commands assigned to the softkeys vary depending on the context. Use keys ◀, ▶, ▲ and ▼ to move the cursor and/or change values depending on the active view. Key ? shows a context-sensitive help page.	
	1 – First start assistant guided settings: Language, date and time, and motor nominal values	
☐	Have the motor name plate data at hand. Power up the drive.	

R1-R4

R5

R6-R9

☐	The First start assistant guides you through the first start-up. The assistant begins automatically. Wait until the control panel enters the view shown on the right. Select the language you want to use by highlighting it (if not already highlighted) and pressing (**OK**). **Note:** After you have selected the language, it takes a few minutes for the control panel to wake up.	English Deutsch Suomi Français Italiano Nederlands Svenska OK ▸
☐	Select **Start set-up** and press (**Next**).	Local ACS580 0.0 Hz **Set-up assistant** Set up drive now? Start set-up Exit & don't show at power-up **Back** 15:52 **Next**
☐	Select the localization you want to use and press (**Next**).	Local ACS580 0.0 Hz **Localization** Unit defaults: International (SI) US standard (Imperial) **Back** 15:52 **Next**
☐	Change the units shown on the panel if needed. • Go to the edit view of a selected row by pressing ▸. • Scroll the view with ▲ and ▼. Go to the next view by pressing (**Next**).	Local ACS580 0.0 Hz **Units** Change the display units if needed. Power: kW ▸ Temperature: °C ▸ Torque: Nm ▸ Currency: EUR ▸ **Back** 15:53 **Next**
☐	To select a value in an edit view: • Use ▲ and ▼ to select the value. Press (**Save**) to accept the new setting, or press (**Cancel**) to go back to the previous view without making changes.	Local ACS580 0.0 Hz **Power:** kW hp **Cancel** 15:53 **Save**

R1-R4

R5

R6-R9

☐ Set the date and time as well as date and time display formats.

- Go to the edit view of a selected row by pressing ▶.
- Scroll the view with ▲ and ▼.

Go to the next view by pressing (**Next**).

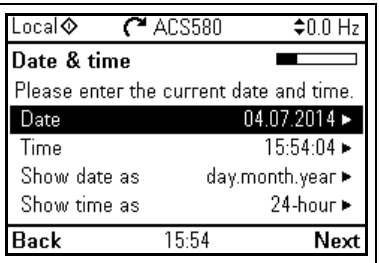

☐ To change a value in an edit view:

- Use ◀ and ▶ to move the cursor left and right.
- Use ▲ and ▼ to change the value.
- Press (**Save**) to accept the new setting, or press (**Cancel**) to go back to the previous view without making changes.

☐ To give the drive a name that will be shown at the top, press ▶.
If you do not want to change the default name (ACS580), continue straight to the set-up of the motor nominal values by pressing (**Next**).

For information on editing text, see *ACS580 standard control program firmware manual* (3AXD50000016097 [English]).

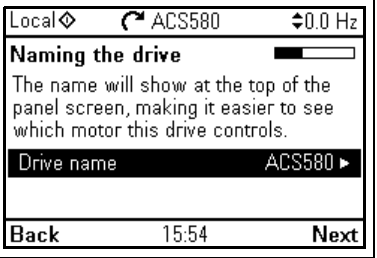

Refer to the motor nameplate for the following nominal value settings of the motor. Enter the values exactly as shown on the motor nameplate.

Example of a nameplate of an induction (asynchronous) motor:

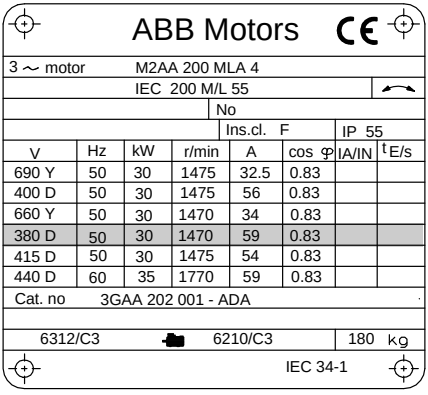

ABB Motors CE

3 ~ motor M2AA 200 MLA 4

IEC 200 M/L 55

No

Ins.cl. F IP 55

V	Hz	kW	r/min	A	cos φ	IA/IN	tE/s
690 Y	50	30	1475	32.5	0.83		
400 D	50	30	1475	56	0.83		
660 Y	50	30	1470	34	0.83		
380 D	50	30	1470	59	0.83		
415 D	50	30	1475	54	0.83		
440 D	60	35	1770	59	0.83		

Cat. no 3GAA 202 001 - ADA

6312/C3 6210/C3 180 kg

IEC 34-1

R1-R4 R5	☐ Check that the motor data is correct. Values are predefined on the basis of the drive size but you should verify that they correspond to the motor. Start with the motor type. Motor nominal cosΦ and nominal torque are optional. Press (**Next**) to continue.	Local ACS580 0.0 Hz **Motor nominal values** Find the values on the motor's nameplate, and enter them here: Type: Asynchronous motor Current: 1.8 A Voltage: 400.0 V Back 15:56 Next
R6-R9	☐ This step is optional, and requires rotating the motor. Do not do this if it could cause any risk, or if the mechanical set-up does not allow it. To do the direction test, select **Spin the motor** and press (**Next**).	Local ACS580 0.0 Hz **Direction test?** Spin the motor to check direction? Not now Spin the motor Back 15:58 Next
	☐ Press the Start key on the panel to start the drive.	Local ACS580 0.0 Hz **Press Start** Warning: Until set-up is done, safeties are not active and motor speed is 5 Hz. Press Start now to spin the motor, then check the direction of rotation. Back 15:59
	☐ Check the direction of the motor. If it is forward, select **Yes, motor is spinning forward** and press (**Next**) to continue. If the direction is not forward, select **No, fix direction** and press (**Next**) to continue.	Local ACS580 5.0 Hz **Is this forward?** Selecting "No, fix direction" tells the drive to change direction, and labels the new direction "forward". Yes, motor is spinning forward No, fix direction Back 15:59 Next
	☐ If you want to make a backup of the settings made so far, select **Backup** and press (**Next**). If you do not want to make a backup, select **Not now** and press (**Next**).	Local ACS580 0.0 Hz **Make backup?** Copies all settings into a backup file stored in the control panel. To restore a backup, go to Menu > Backups. Not now Backup Back 16:00 Next

R1-R4 R5 R6-R9

☐	The first start is now complete and the drive is ready for use. Press (**Done**) to enter the Home view.	Local ACS580 0.0 Hz **First start complete** Drive is ready for use. Start/Stop: DI1 Direction: DI2 Reference (freq): AI1 scaled **Back** 16:00 **Done**
☐	The Home view monitoring the values of the selected signals is shown on the panel.	Local ACS580 0.0 Hz Output frequency Hz 0.00 Motor current A 0.00 Motor torque % 0.0 **Options** 16:00 **Menu**
2 – Additional settings in the Primary settings menu		
☐	Make any additional adjustments, for example macro, ramps and limits, starting from the **Main** menu – press (**Menu**) to enter the **Main** menu. Select **Primary settings** and press (**Select**) (or). We recommend that you make at least these additional settings: • Choose a macro or set start, stop and reference values individually • Ramps • Limits With the **Primary settings** menu, you can also adjust settings related to the motor, PID, fieldbus, advanced functions and clock, region and display. In addition, the menu contains an item to reset the panel Home view. To get more information on the **Primary settings** menu items, press ? to open the help page.	Local ACS580 0.0 Hz **Main menu** Primary settings I/O Diagnostics **Exit** 16:00 **Select** Local ACS580 0.0 Hz **Primary settings** Macro: ABB standard Motor Start, stop, reference Ramps Limits **Back** 16:00 **Select**

2 – Additional settings: Start, stop and reference values

R1-R4

R5

R6-R9

☐ If you do not wish to use a macro, define the settings for start, stop and reference:

Select **Start, stop, reference** and press (**Select**) (or ▶).

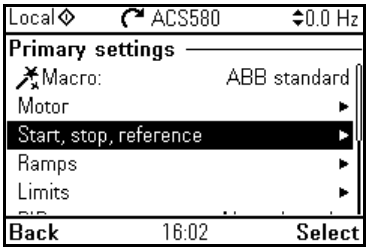

☐ Adjust the parameters according to your needs.

Select a parameter and, depending on the parameter type, press (**Edit**) or press (**Select**) (or ▶).

When you change the settings, you also change the use of the I/O signals in the drive. Make sure the actual I/O wiring and the use of I/O in the control program match each other. You can check the current I/O use in the **I/O** menu under the **Main** menu.

After making the adjustments, go back to the **Primary settings** menu by pressing (**Back**).

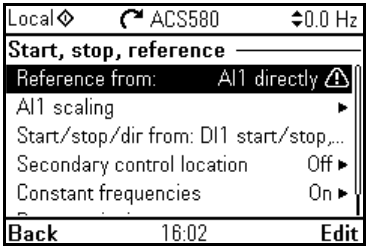

2 – Additional settings: Ramps (acceleration and deceleration times for the motor)

☐ Select **Ramps** and press (**Select**) (or ▶).

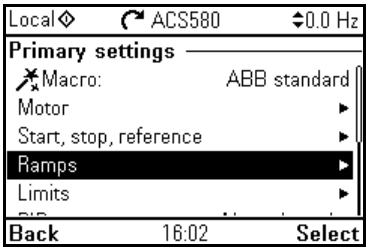

☐ Adjust the parameters according to your needs.

Select a parameter and press (**Edit**).

After making the adjustments, go back to the **Primary settings** menu by pressing (**Back**).

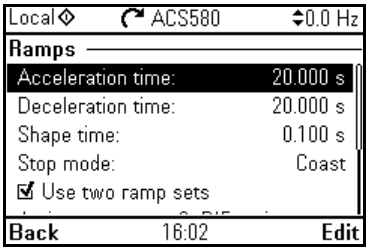

2 – Additional settings: Limits		
☐	Select **Limits** and press (**Select**) (or ▶).	Local ACS580 0.0 Hz **Primary settings** Macro: ABB standard Motor ▶ Start, stop, reference ▶ Ramps ▶ Limits ▶ **Back** 16:02 **Select**
☐	Adjust the parameters according to your needs. Select a parameter and press (**Edit**). After making the adjustments, go back to the **Primary settings** menu by pressing (**Back**).	Local ACS580 0.0 Hz **Limits** Minimum frequency: -50.00 Hz Maximum frequency: 50.00 Hz Maximum current: 3.24 A **Back** 16:03 **Edit**

[Page intentionally left blank]

Compliance with the European Machinery Directive 2006/42/EC

Declaration of conformity

R1-R4

R5

R6-R9

ABB

EU Declaration of Conformity

(According to Machinery Directive 2006/42/EC)

We

Manufacturer: ABB Oy, Drives
Address: Hiomotie 13, P.O Box 184, 00381 Helsinki, Finland.

hereby declare that the product

ACS580-01 (frame sizes R0, R1, R2, R3, R4, R5, R6, R7, R8 and R9)

with regard to the following safety function

Safe torque off

fulfils all the relevant safety component requirements of EC Machinery Directive 2006/42/EC, when the listed safety function is used for safety component functionality.

The following harmonized standards below were used:

EN 61800-5-2: 2007	*Adjustable speed electrical power drive systems – Part 5-2: Safety requirements - Functional*
EN 62061: 2015	*Safety of machinery – Functional safety of safety-related electrical, electronic and programmable electronic control systems*
EN ISO 13849-1: 2008 + AC: 2009	*Safety of machinery – Safety-related parts of control systems. Part 1 General requirements*
EN ISO 13849-2: 2012	*Safety of machinery – Safety-related parts of the control systems. Part 2: Validation*
EN 60204-1:2006 + A1:2009 + AC:2010	*Safety of machinery – Electrical equipment of machines – Part 1 General requirements*

Other used standards:

IEC 61508 ed. 2: 2010	Functional safety of electrical / electronic / programmable electronic safety-related systems

The products referred in this Declaration of Conformity fulfil the relevant provisions of the Low Voltage Directive 2006/95/EC and EMC Directive 2004/108/EC. Declaration of conformity according to these directives is available from the manufacturer.

Person authorized to compile the technical file:

Name: Risto Mynttinen
Address: P.O. Box 184, FIN-00381 Helsinki, Finland

Helsinki, 2016-02-15

Tuomo Hoysniemi
Vice President
ABB Oy

3AXD10000302783 Page 1/1

[Page intentionally left blank]

ABB general purpose drives

Quick installation guide
ACS580-01 drives
Installation figures

R1-R4

R5

R6-R9

Power and productivity
for a better world™

[Page intentionally left blank]

R1…R4 Figures A

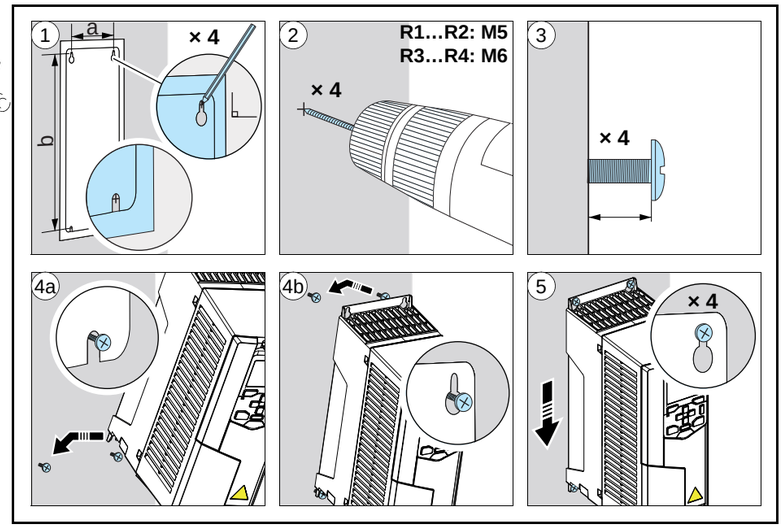

B1

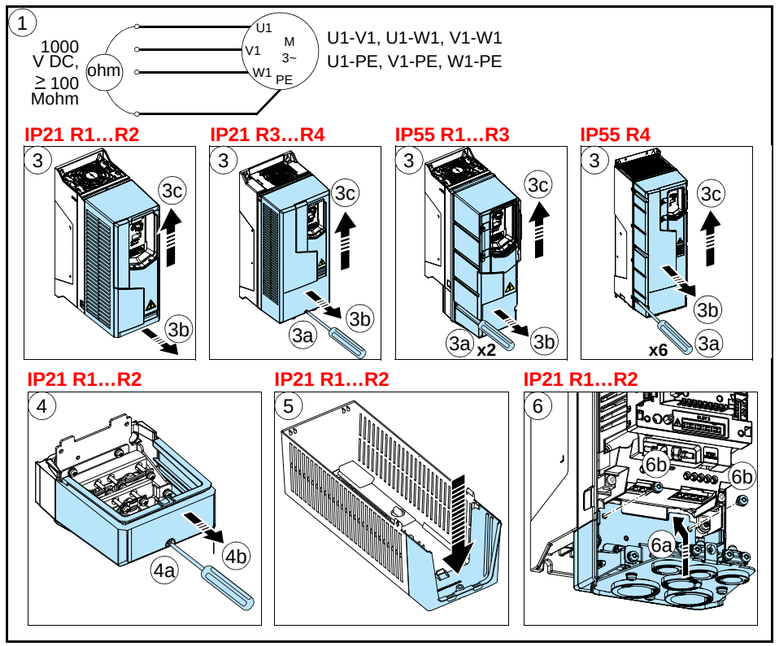

B2

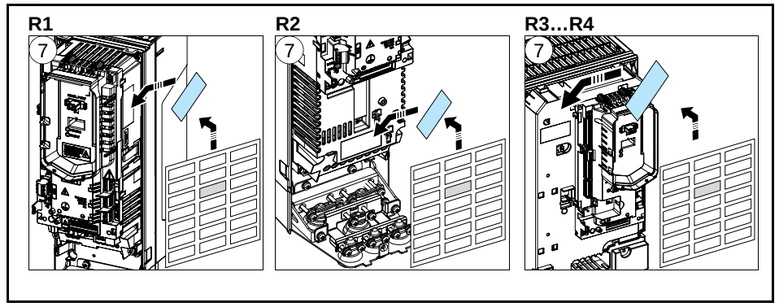

B3

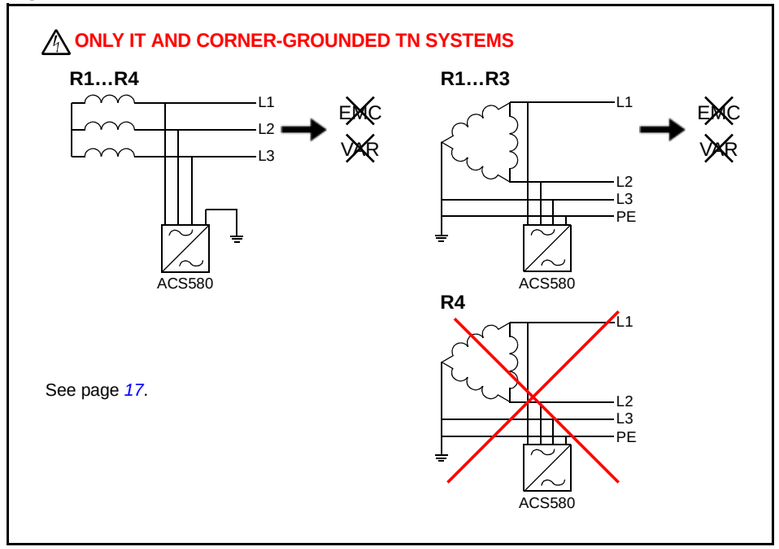

See page 17.

C1

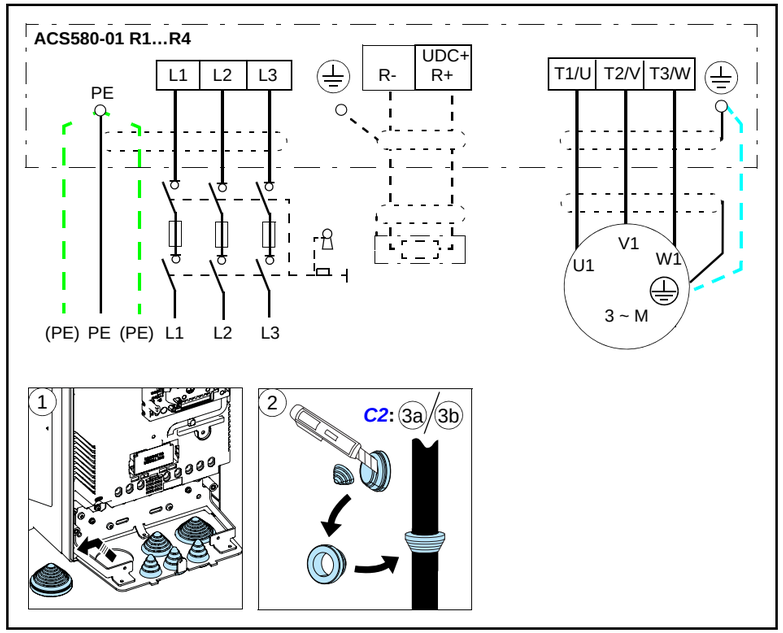

C2

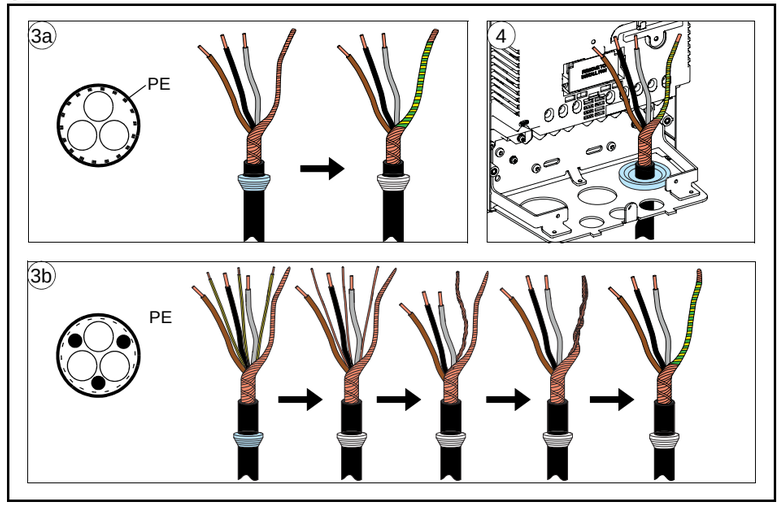

D

R1…R2

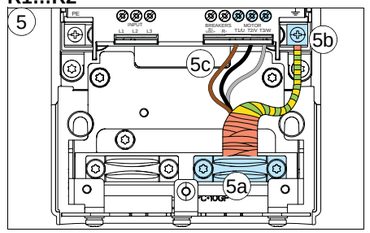

R3

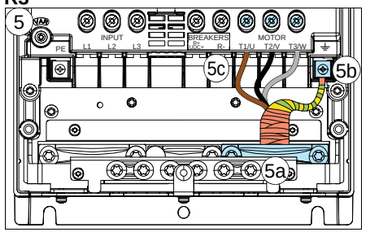

R4

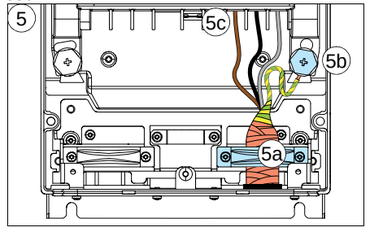

Frame size	R1		R2	
	N·m	lbf·ft	N·m	lbf·ft
T1/U, T2/V, T3/W	0.5…0.6	0.4	1.2…1.5	1.1
PE, ⏚	1.5	1.1	1.5	1.1
	1.2	0.9	1.2	0.9

Frame size	R3		R4	
	N·m	lbf·ft	N·m	lbf·ft
T1/U, T2/V, T3/W	2.5…4.5	3.3	4.0	3.0
PE, ⏚	1.5	1.1	2.9	2.1
	1.2	0.9	1.2	0.9

E1

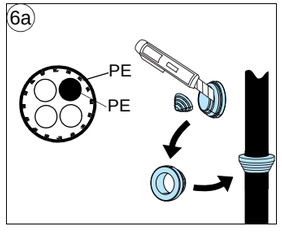

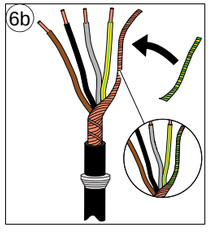

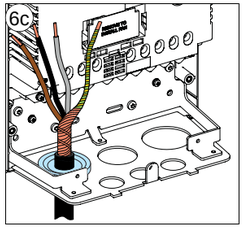

E2

R1…R2

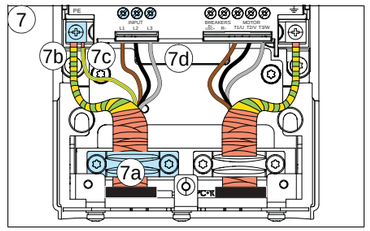

R3

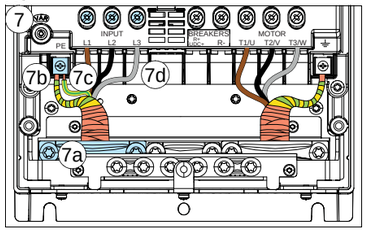

R4

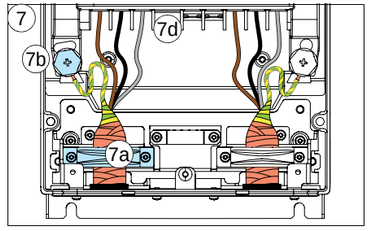

Frame size	R1		R2	
	N·m	lbf·ft	N·m	lbf·ft
L1, L2, L3	0.5…0.6	0.4	1.2…1.5	1.1
PE, ⏚	1.5	1.1	1.5	1.1
	1.2	0.9	1.2	0.9

Frame size	R3		R4	
	N·m	lbf·ft	N·m	lbf·ft
L1, L2, L3	2.5…4.5	3.3	4.0	3.0
PE, ⏚	1.5	1.1	2.9	2.1
	1.2	0.9	1.2	0.9

F

R1…R2

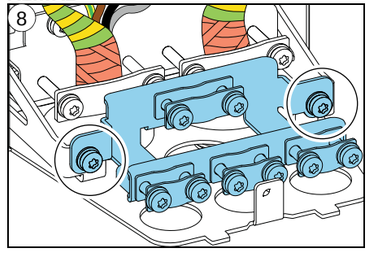

R4

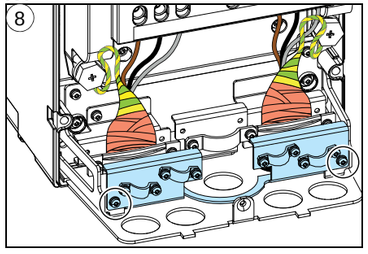

G1

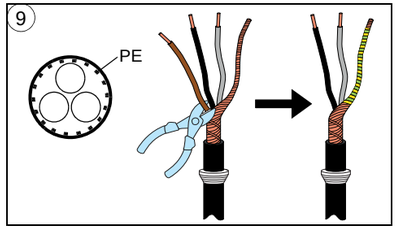

G2

R1…R2

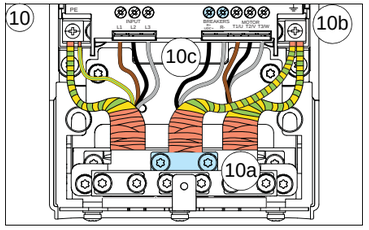

R3

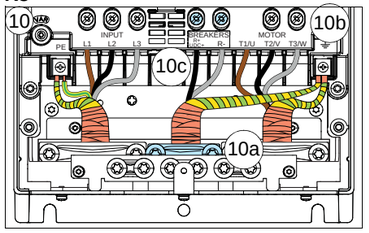

Frame size	R1		R2		R3	
	N·m	lbf·ft	N·m	lbf·ft	N·m	lbf·ft
R-, R+	0.5…0.6	0.4	1.2…1.5	1.1	2.5…4.5	3.3
PE, ⏚	1.5	1.1	1.5	1.1	1.5	1.1
	1.2	0.9	1.2	0.9	1.2	0.9

3AXD5000044838 Rev B

R1…R4 Figures H

R1…R2

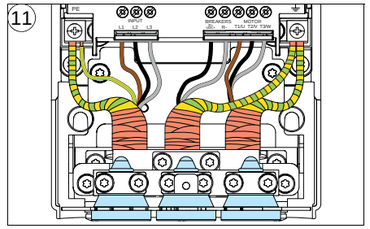

R3

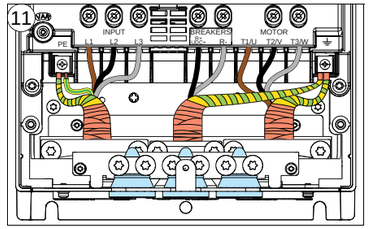

R4

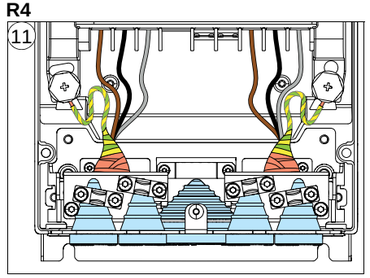

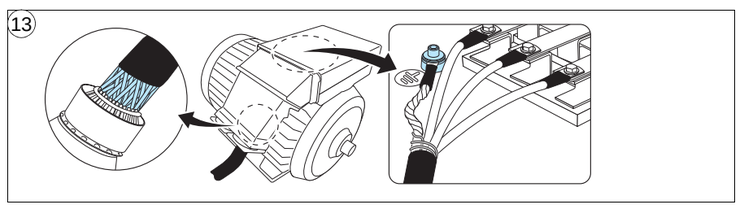

I

R1…R2

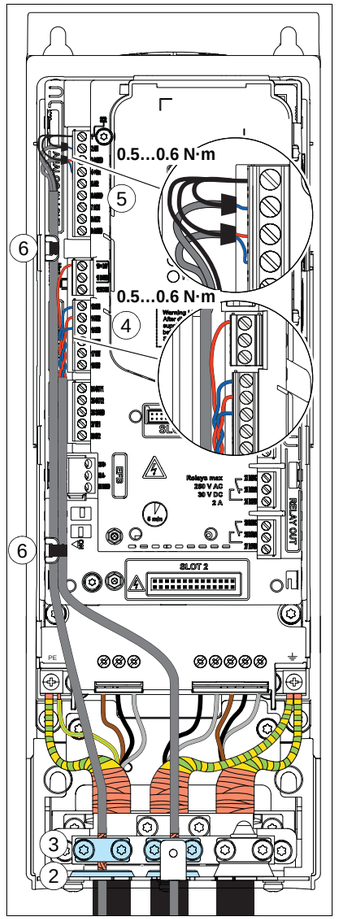

R3

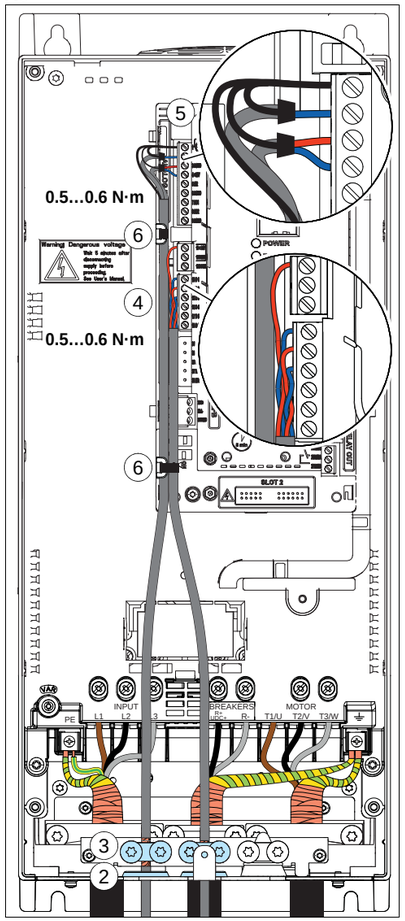

I2

R4

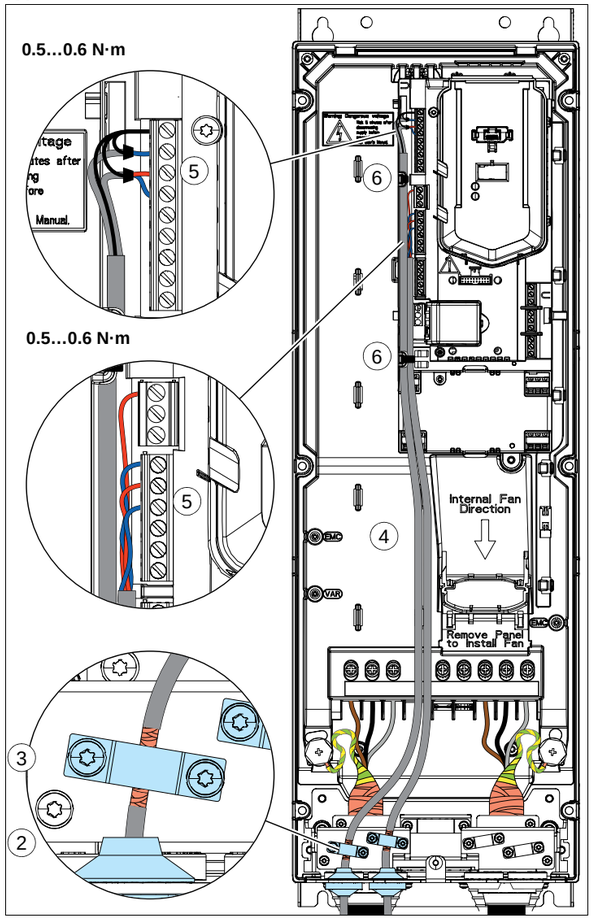

J

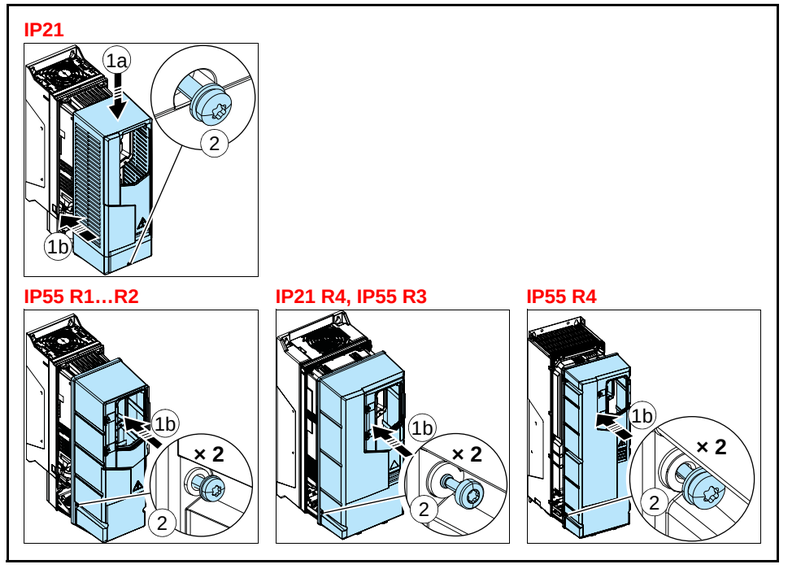

R5 Figures A

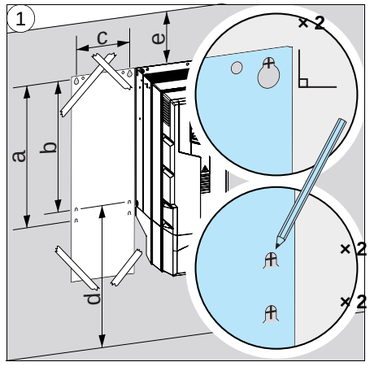

	R5 IP21		R5 IP55	
	mm	in	mm	in
a	612	24.09	612	24.09
b	581	22.87	581	22.87
c	160	6.30	160	6.30
d >	200	7.9	200	7.9
e >	200	7.9	200	7.9

⚠	R5 IP21		R5 IP55	
	kg	lb	kg	lb
	28.3	62.4	28.6	63.1

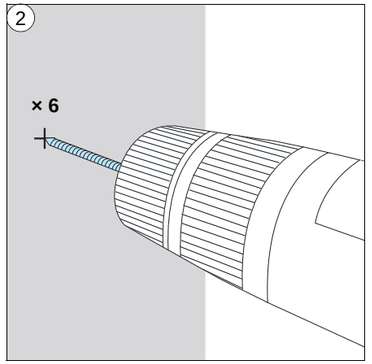

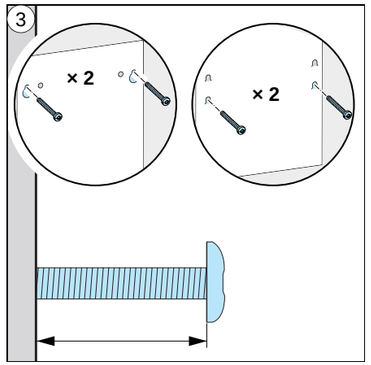

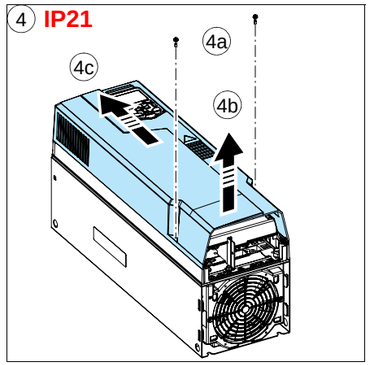

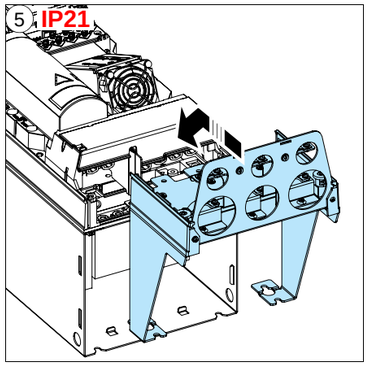

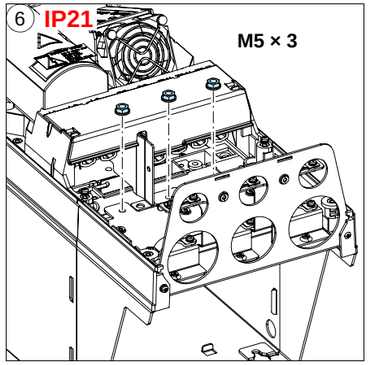

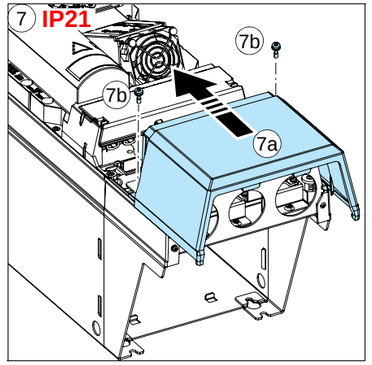

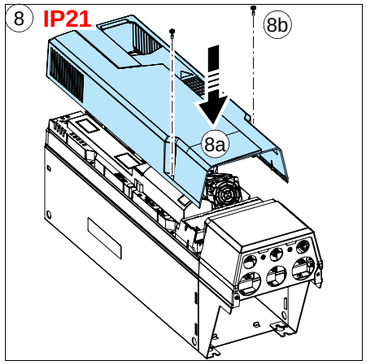

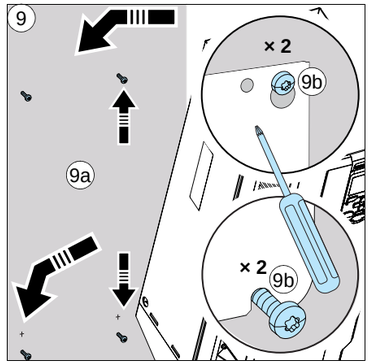

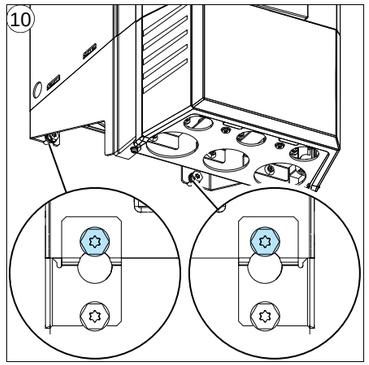

B

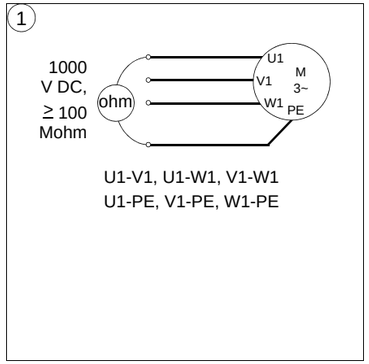

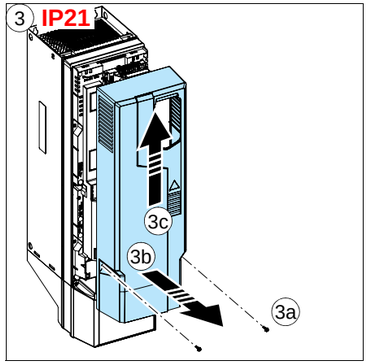

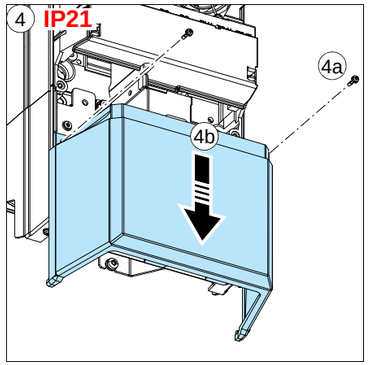

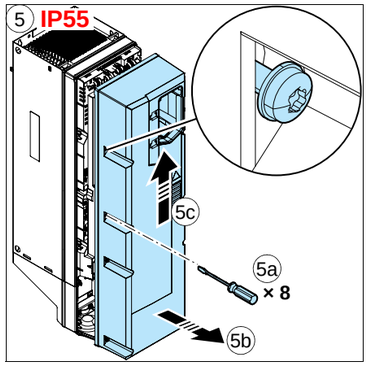

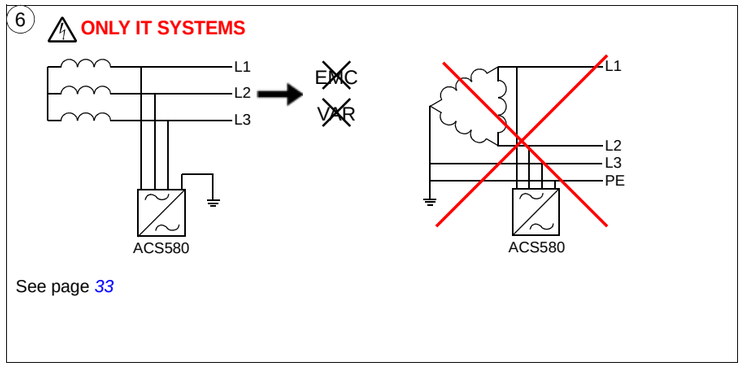

See page 33

C

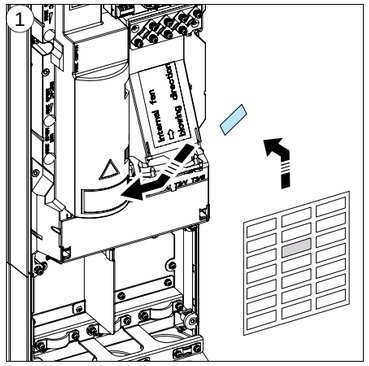

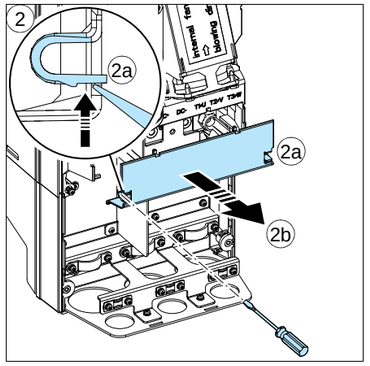

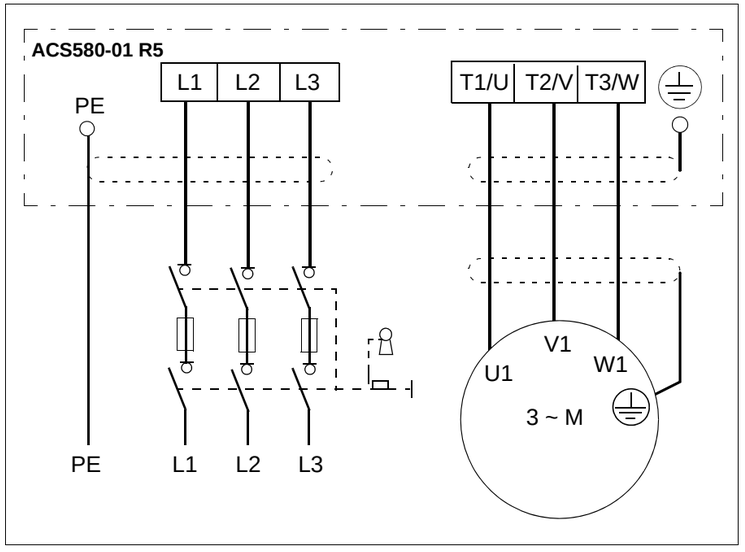

D

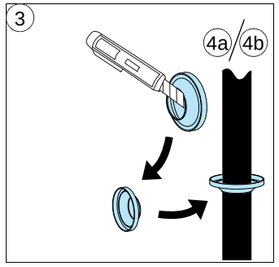

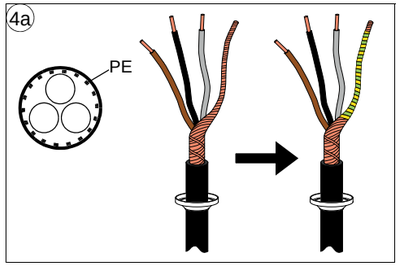

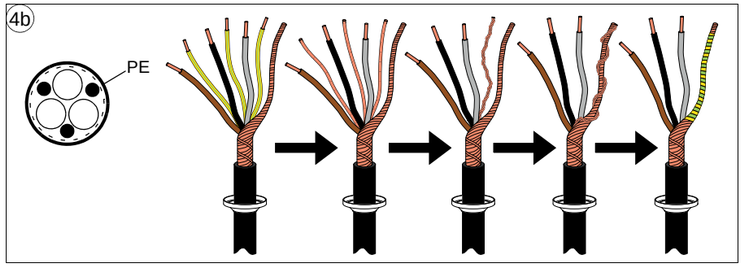

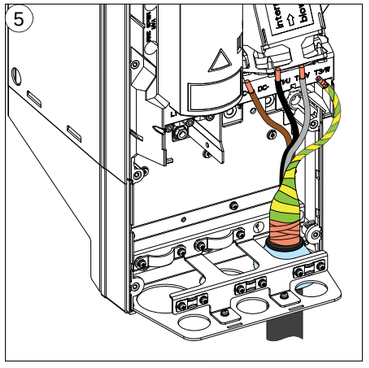

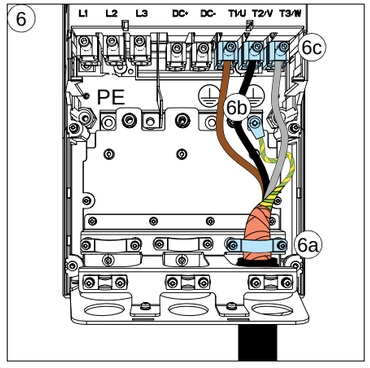

Frame size	T1/U, T2/V, T3/W		PE, ⏚				
	N·m	lbf·ft	M	N·m	lbf·ft	N·m	lbf·ft
R5	5.6	4.1	M5	4.5	3.3	1.2	0.9

E

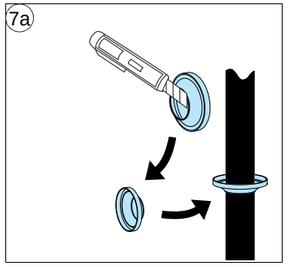

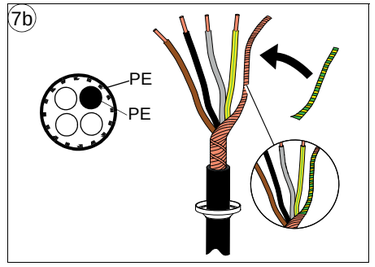

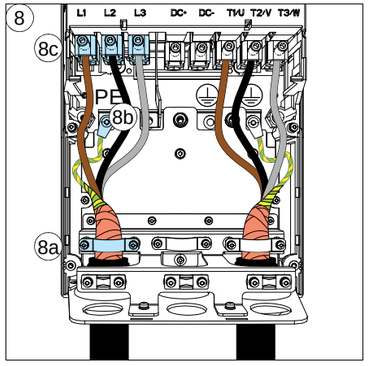

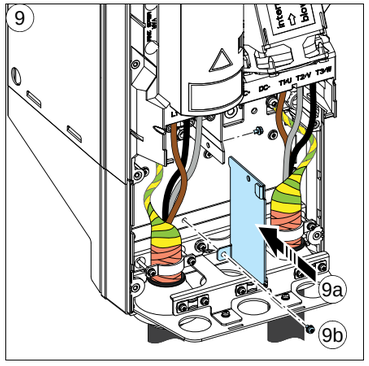

Frame size	L1, L2, L3,		PE, ⏚				
	N·m	lbf·ft	M	N·m	lbf·ft	N·m	lbf·ft
R5	5.6	4.1	M5	4.5	3.3	1.2	0.9

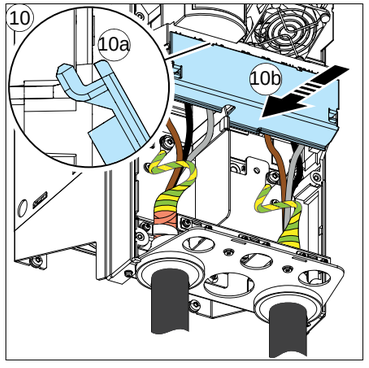

3AXD50000044838 Rev B

R5 Figures F

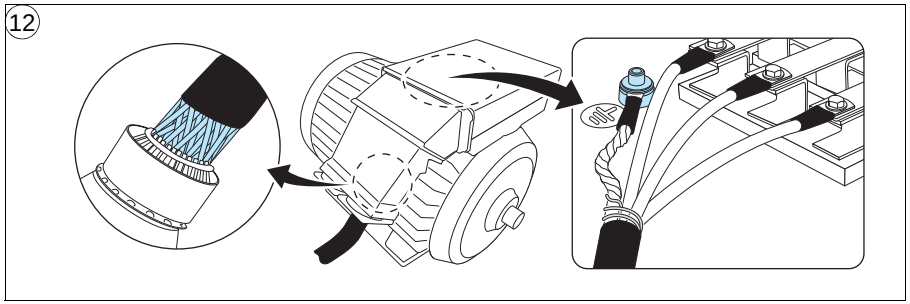

G

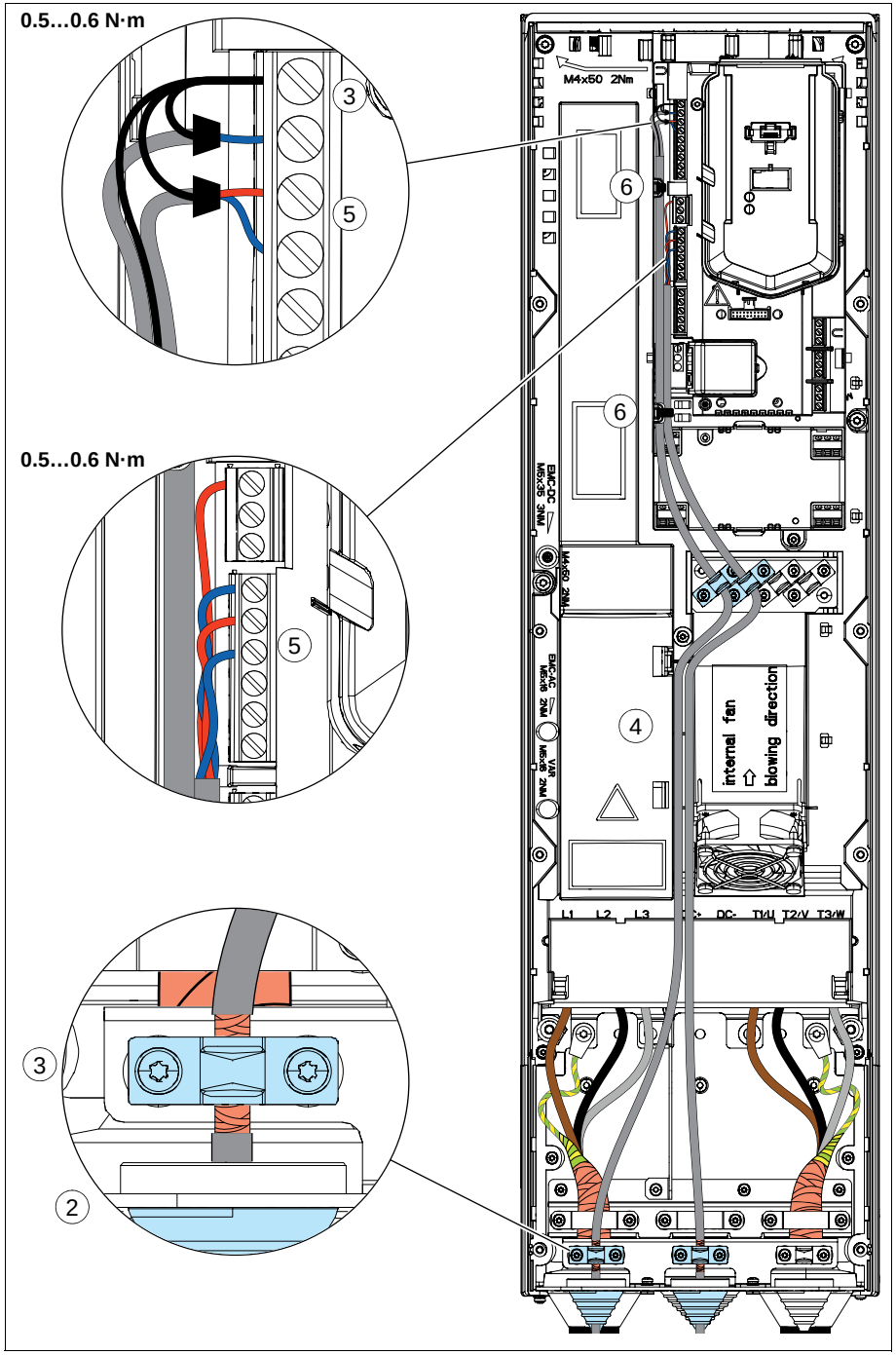

IP21

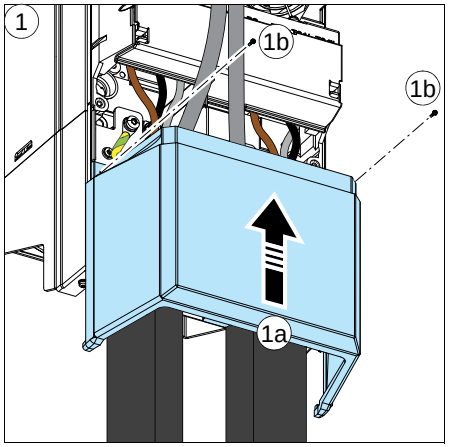

IP21

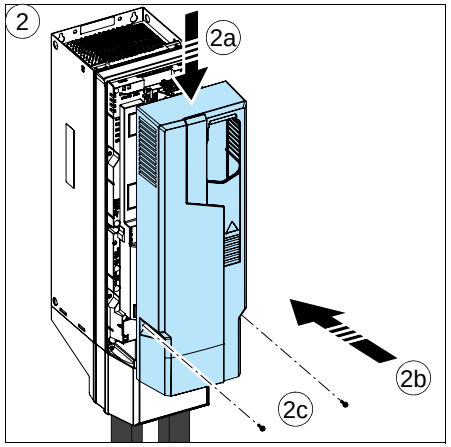

IP55

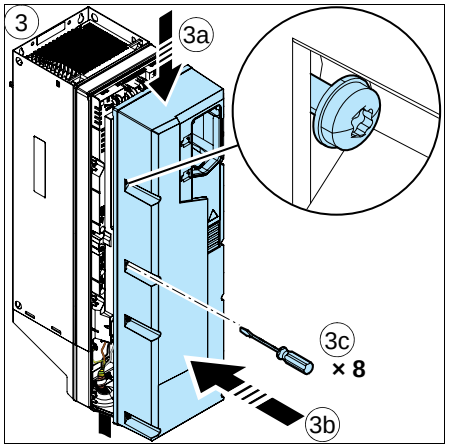

R6…R9 Figures A

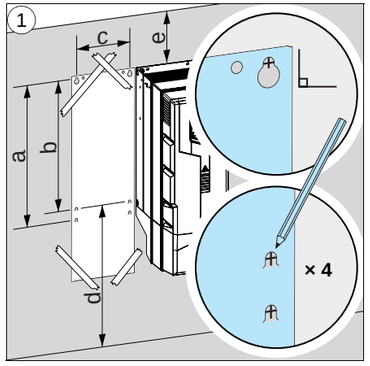

	R6	R7	R8	R9
a (mm/in)	571/ 22.5	623/ 24.5	701/ 27.6	718/ 28.3
b (mm/in)	531/ 20.9	583/ 22.9	658/ 25.9	658/ 25.9
c (mm/in)	213/ 8.4	245/ 9.7	263/ 10.4	345/ 13.6
d > (mm/in)	300/ 11.8	300/ 11.8	300/ 11.8	300/ 11.8
e > (mm/in)	200/ 7.9	200/ 7.9	200/ 7.9	200/ 7.9
kg/lb ⚠	IP21	IP21	IP21	IP21
	42/93	54/119	69/152	97/214
	IP55	IP55	IP55	IP55
	43/95	56/124	77/170	103/227

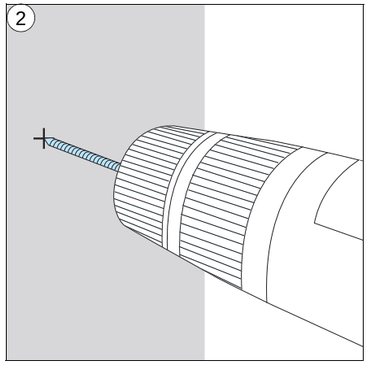

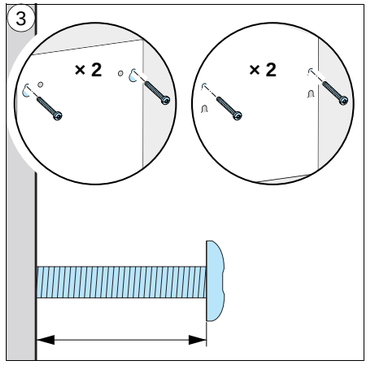

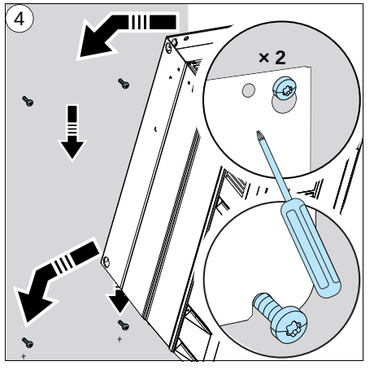

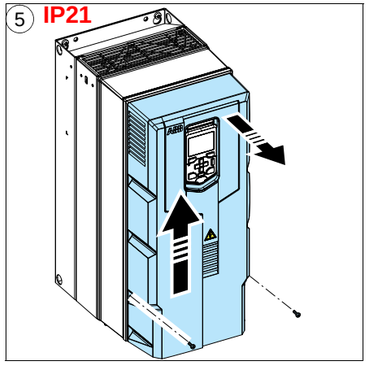

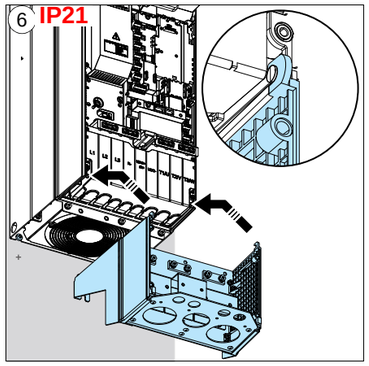

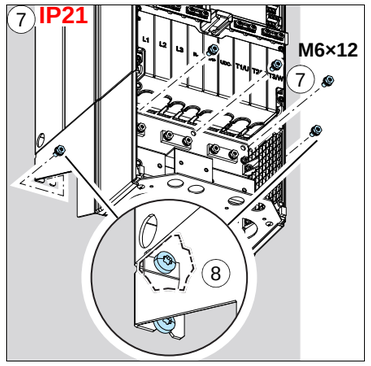

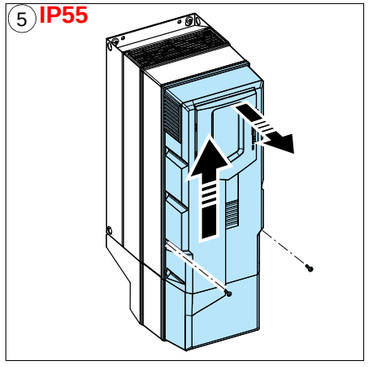

B

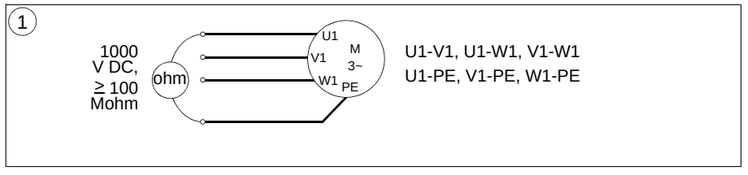

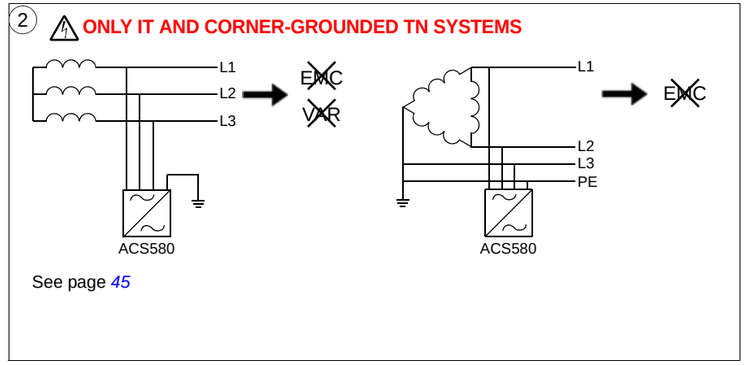

See page 45

C

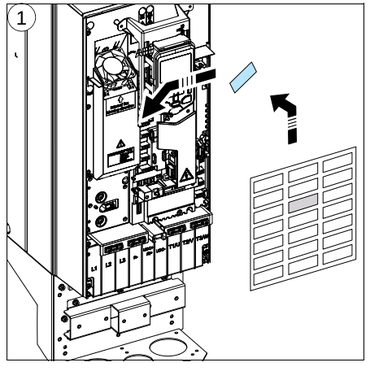

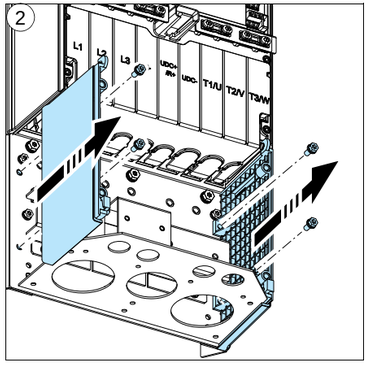

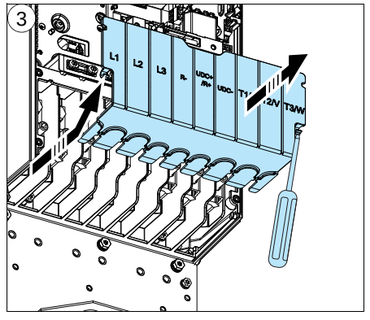

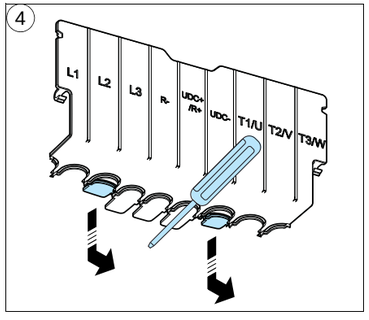

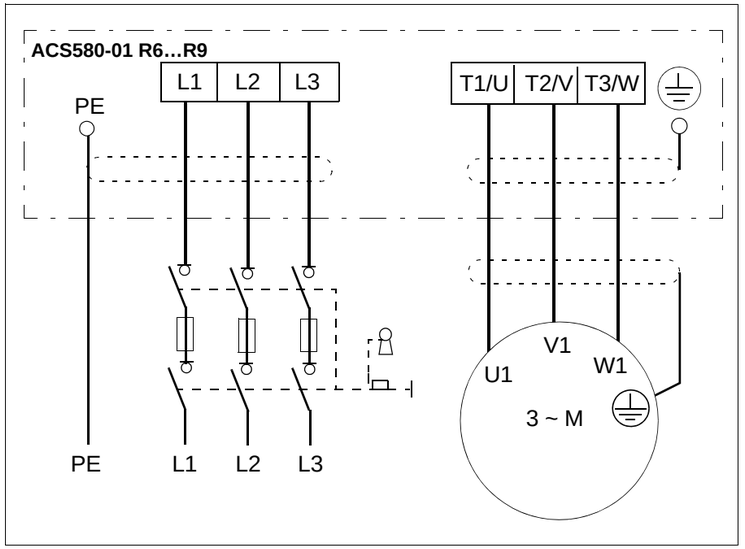

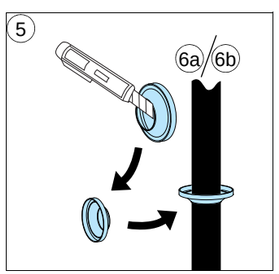

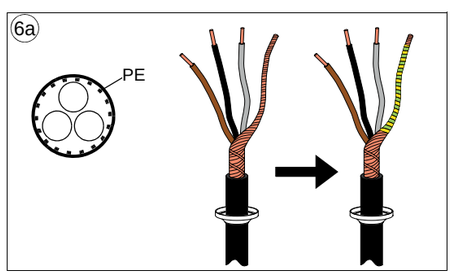

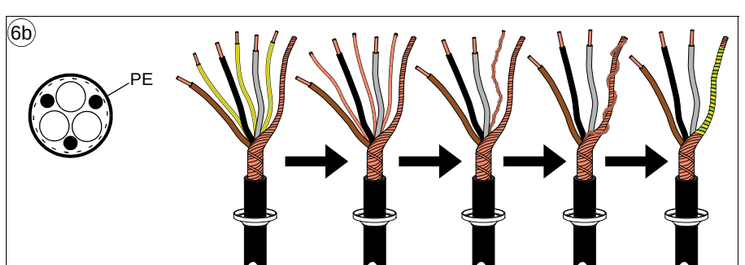

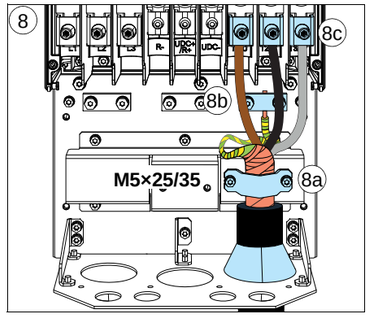

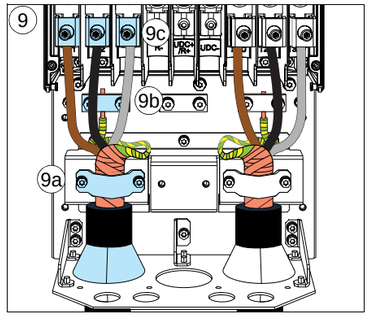

	R6		R7		R8		R9	
	N·m	lbf·ft	N·m	lbf·ft	N·m	lbf·ft	N·m	lbf·ft
L1, L2, L3, T1/U, T2/V, T3/W	30	22	40	30	40	30	70	52
PE	10	7	10	7	10	7	10	7

R8...R9 only

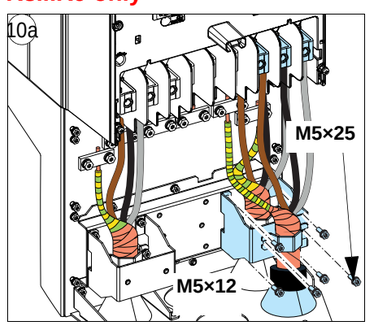

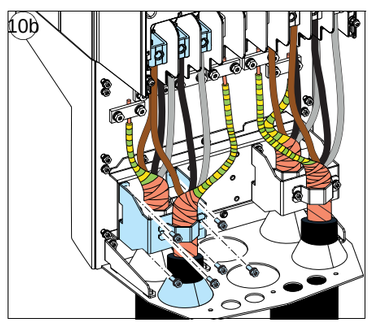

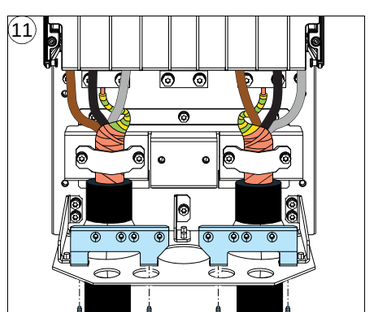

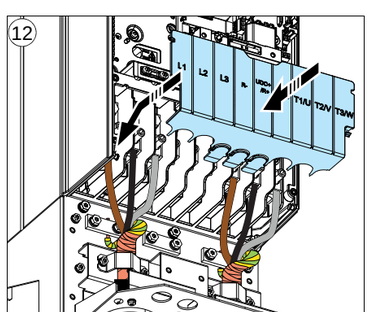

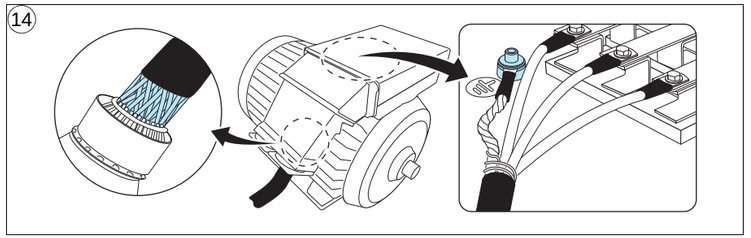

D

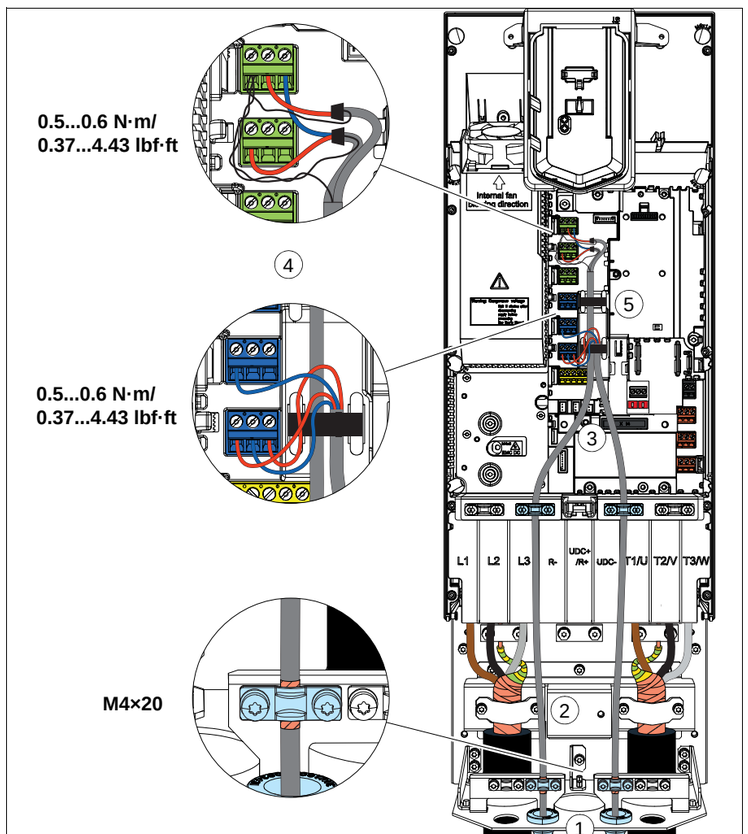

3AXD5000009286 Rev D

R6…R9 Figures E

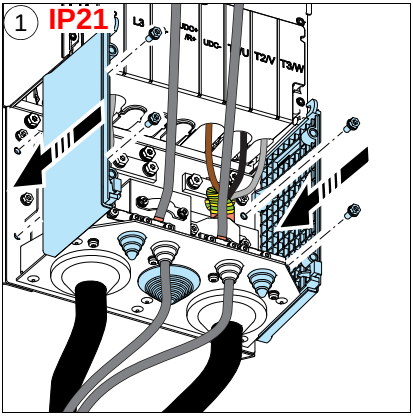

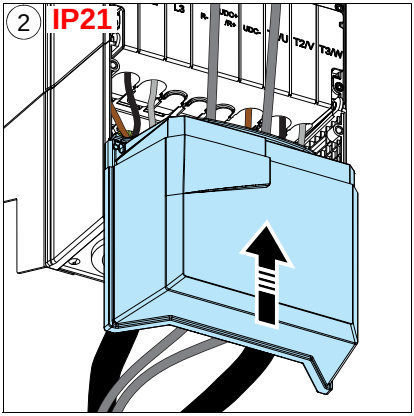

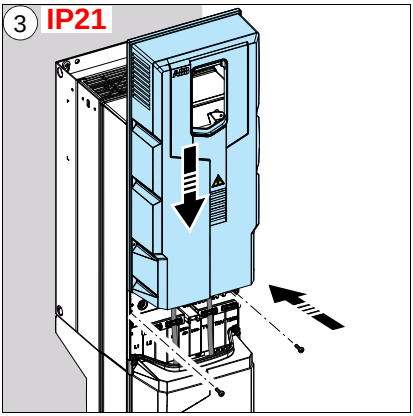

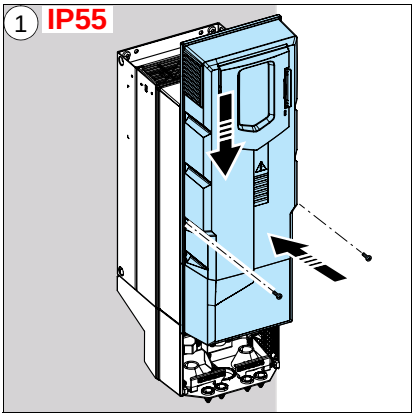

[Page intentionally left blank]

Further information

Product and service inquiries

Address any inquiries about the product to your local ABB representative, quoting the type designation and serial number of the unit in question. A listing of ABB sales, support and service contacts can be found by navigating to www.abb.com/searchchannels.

Product training

For information on ABB product training, navigate to new.abb.com/service/training.

Providing feedback on ABB Drives manuals

Your comments on our manuals are welcome. Navigate to new.abb.com/drives/manuals-feedback-form.

Document library on the Internet

You can find manuals and other product documents in PDF format on the Internet at www.abb.com/drives/documents.

Contact us

www.abb.com/drives

3AXD50000009286 REVE 11/15/2017

Power and productivity
for a better world™